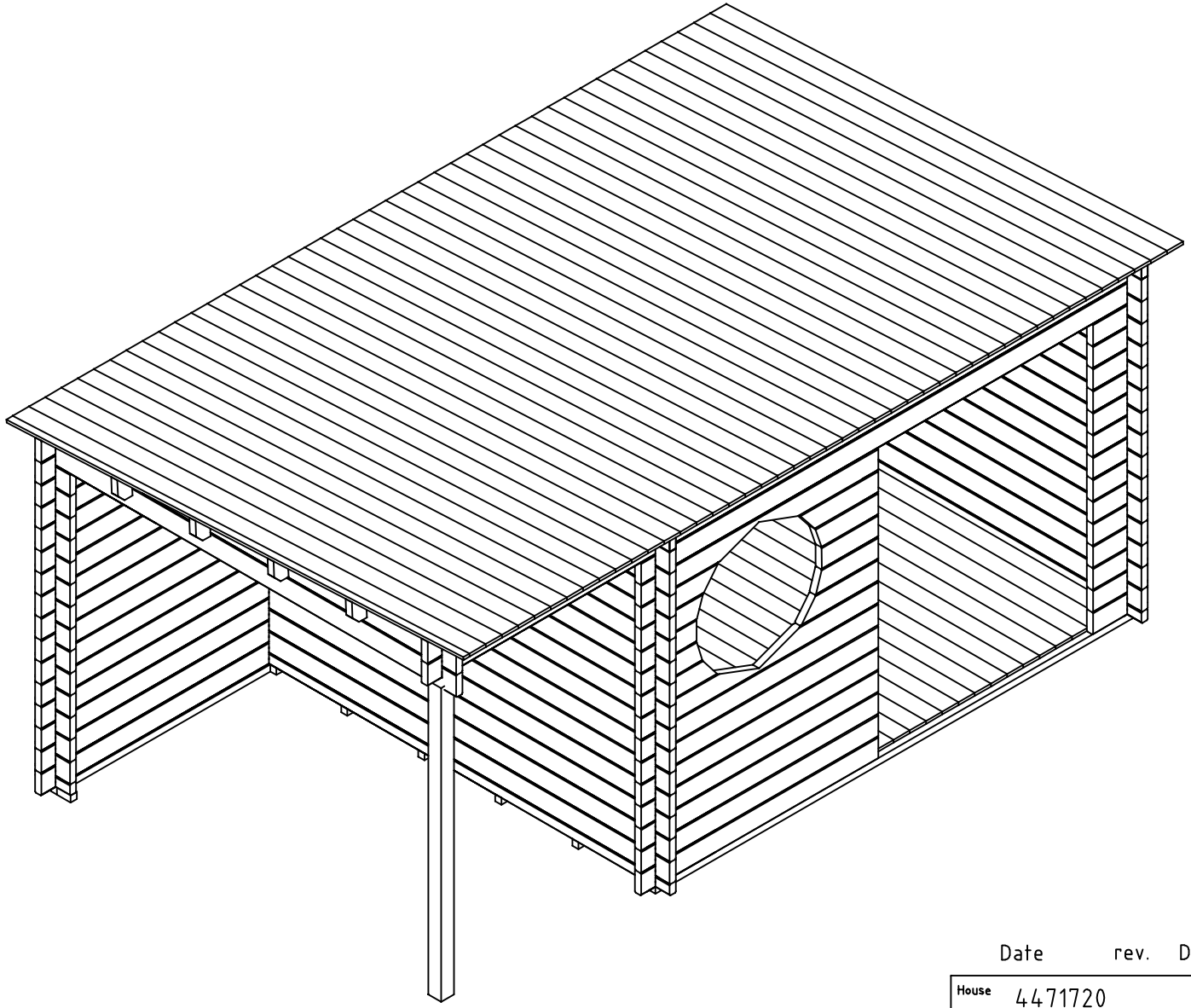

Date	rev.	Description	V 1.0

House	4471720	Sheet	1
Drawing	3D	Scale	
Material	44x135	Date	30.10.2025
Drawer	K.K.	File	4471720 3D.dwg

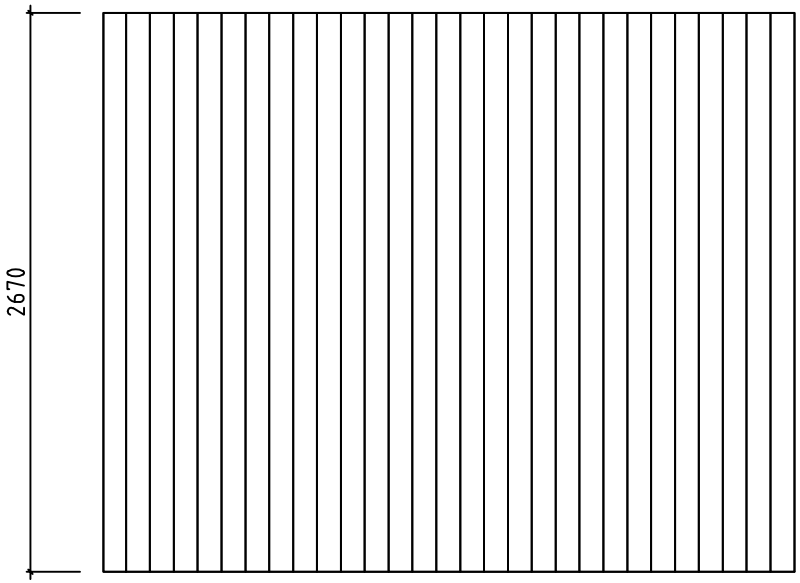

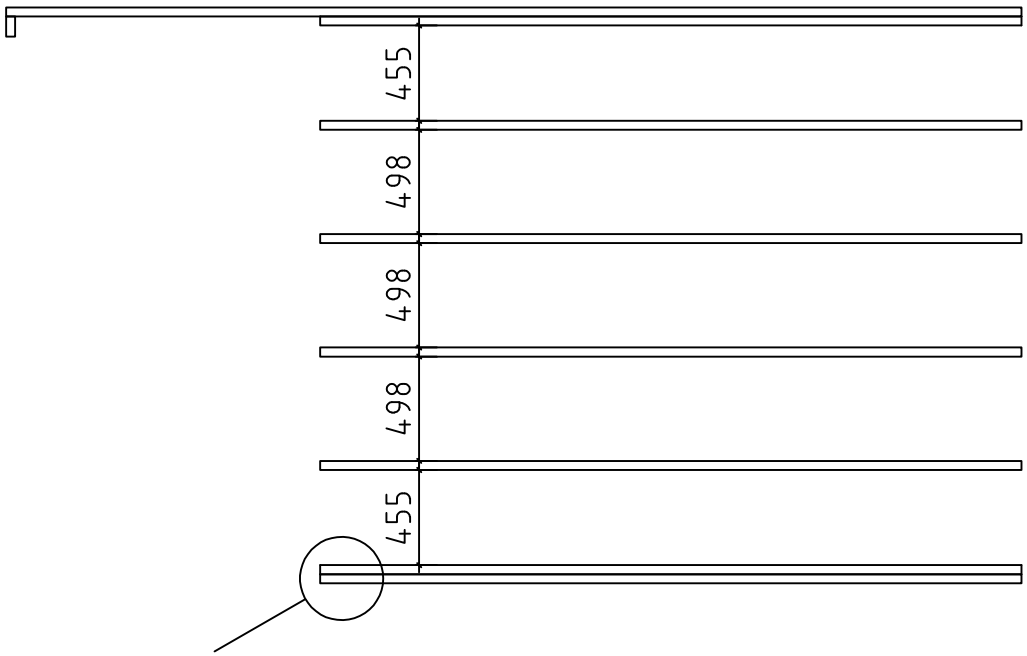

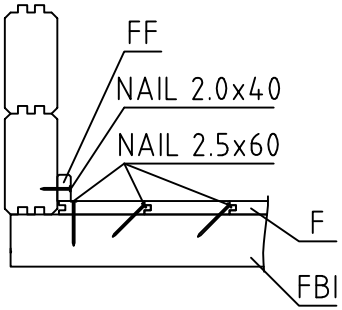

House	4471720	Sheet	2
Drawing	FLOORBEAMS	Scale	1:35
Material	43x43	Date	30.10.2025
Drawer	K.K.	File	4471720.dwg

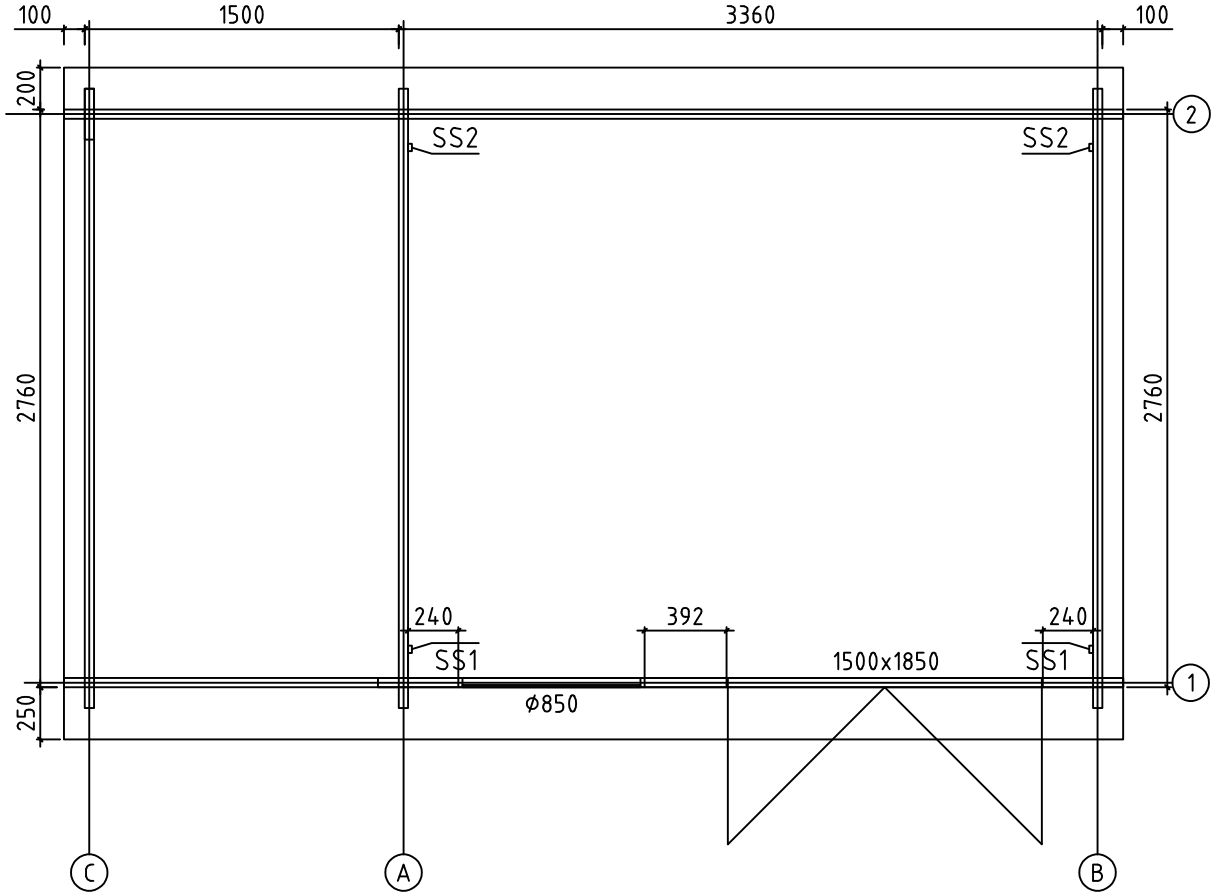

House	4471720	Sheet	3
Drawing	Plan	Scale	1:35
Material	44x135	Date	30.10.2025
Drawer	K.K.	File	4471720.dwg

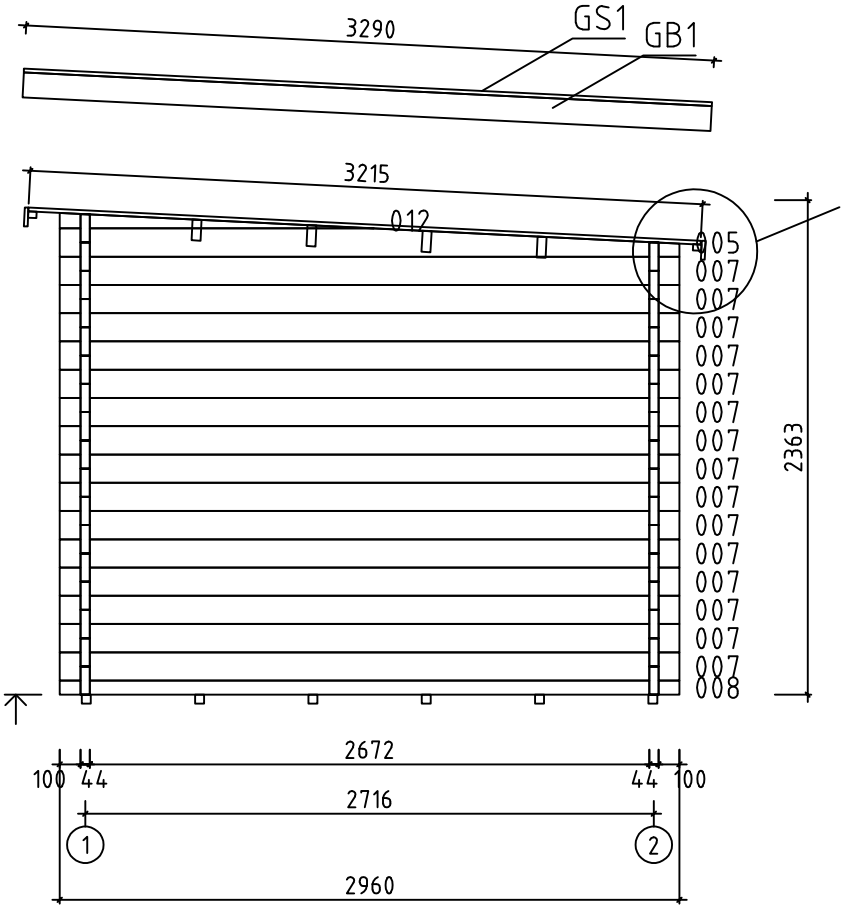

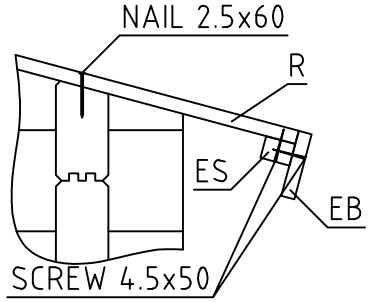

House	4471720	Sheet	4
Drawing	WALL-WAND-MUUR A	Scale	1:35
Material	4.4x13.5	Date	30.10.2025
Drawer	K.K.	File	4471720.dwg

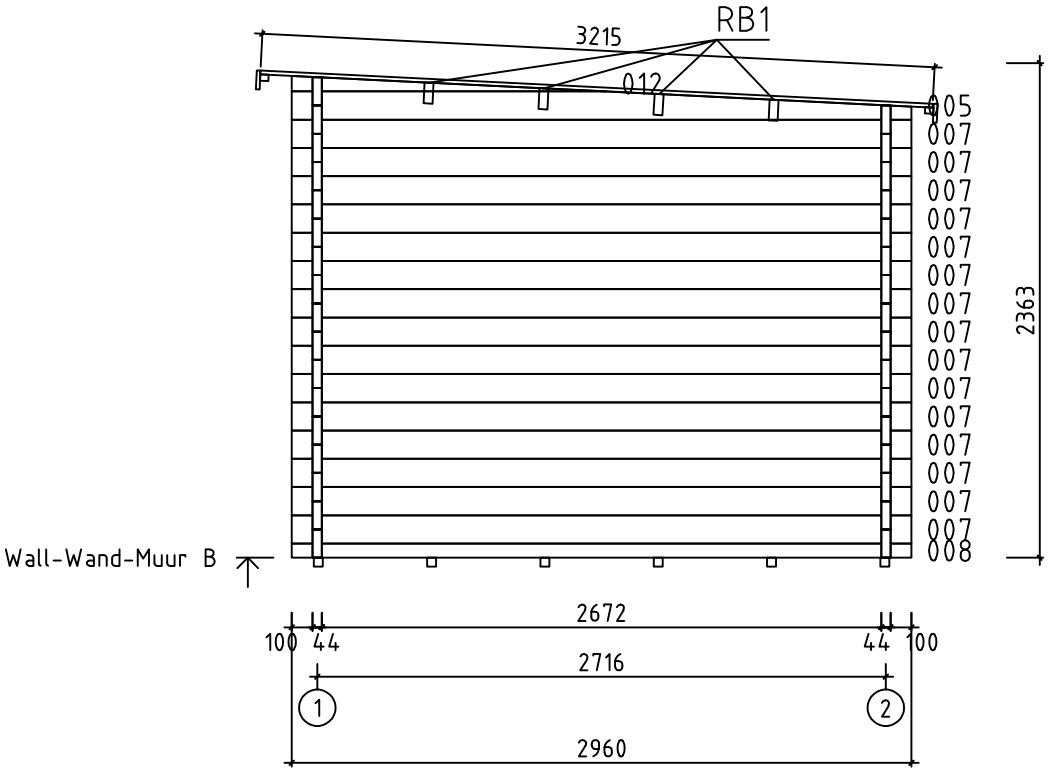

House	4471720	Sheet	5
Drawing	WALL-WAND-MUUR B	Scale	1:35
Material	4.4x13.5	Date	30.10.2025
Drawer	K.K.	File	4471720.dwg

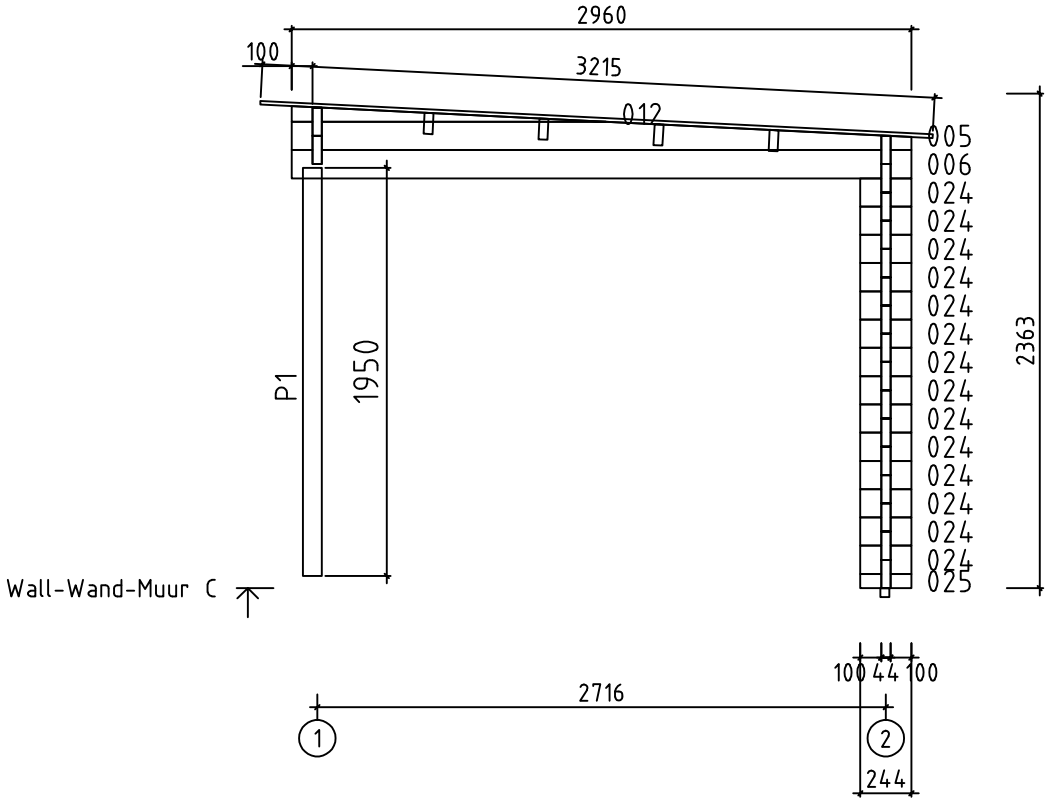

House	4471720	Sheet	6
Drawing	WALL-WAND-MUUR C	Scale	1:35
Material	4.4x13.5	Date	30.10.2025
Drawer	K.K.	File	4471720.dwg

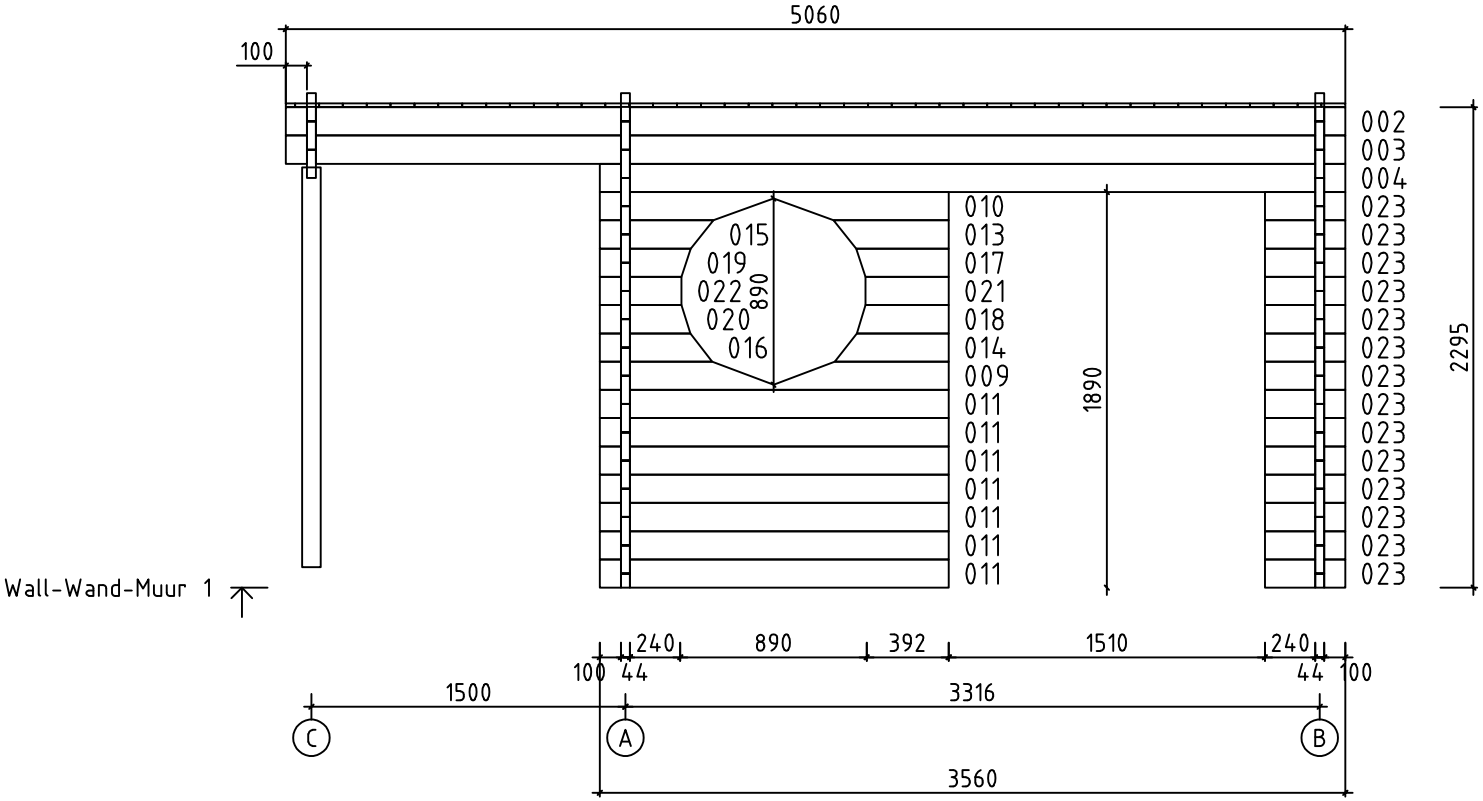

House	4471720	Sheet	7
Drawing	WALL-WAND-MUUR 1	Scale	1:35
Material	4.4x13.5	Date	30.10.2025
Drawer	K.K.	File	4471720.dwg

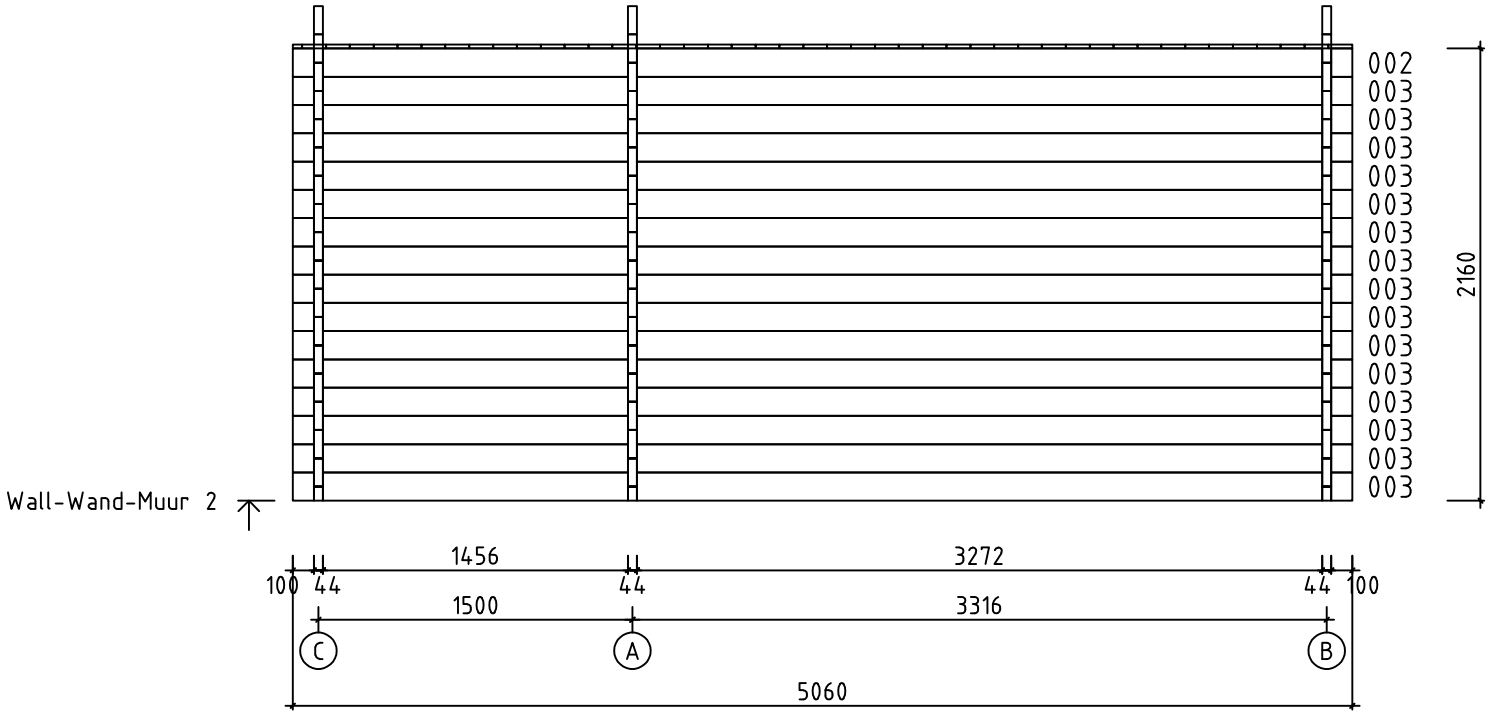

House	4471720	Sheet	8
Drawing	WALL-WAND-MUUR 2	Scale	1:35
Material	4.4x13.5	Date	30.10.2025
Drawer	K.K.	File	4471720.dwg

Pos	Specification-Bestimmung-Omschrijving	Pcs	Profile (mm)	L (mm)
001	SPARE BEAM-ERZATZBOHLE-VOORRAADPLANK 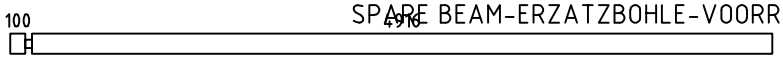	1	44x135	5060
002	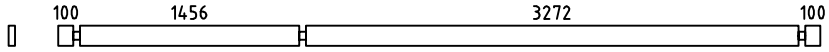 PM	2	44x135	5060
003	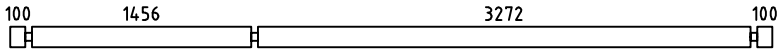	16	44x135	5060
004	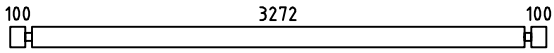	1	44x135	3560
007	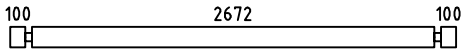	28	44x135	2960
008	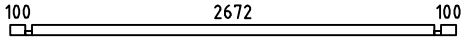	2	44x68	2960
009	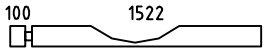	1	44x135	1666
010	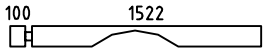	1	44x135	1666
011	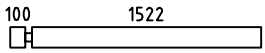	7	44x135	1666
013		1	44x135	550
014		1	44x135	544
015		1	44x135	542
016		1	44x135	536
017		1	44x135	442
018		1	44x135	439
019		1	44x135	434
020		1	44x135	431
021		1	44x135	398
022		1	44x135	390
023		14	44x135	384
024		14	44x135	244
025		1	44x68	244
WA-1	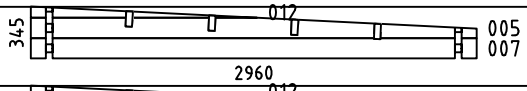	1	44x345	2960
WB-1	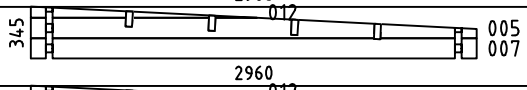	1	44x345	2960
WC-1	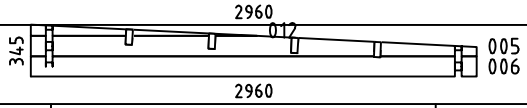	1	44x345	2960

Kood 4471720	Materjal	File 4471720.dwg	Leht 9

Pos	Specification-Bestimmung-Omschrijving	Pcs	Profile (mm)	L (mm)
HB	HIT BLOCK-SCHLAGHÖLZER-BLAZENPLANK	2	44x135	300
FBI2	FLOORBEAMS-FUSSBODENBALKEN-POUTRES DE FONDATION IMPRÉGNÉS IMM	1	43x43	4850
FBI3	FLOORBEAMS-FUSSBODENBALKEN-POUTRES DE FONDATION IMPRÉGNÉS IMM	7	43x43	3350
FBI1	FLOORBEAMS-FUSSBODENBALKEN-POUTRES DE FONDATION IMPRÉGNÉS IMM	1	43x43	96
P1	POST-PFOSTEN-POTEAU	1	90x90	1950
RB1	ROOFBEAMS-DACHBALKEN-DAKBALK 100 1456 3272 100	4	43x140	5060
F1	FLOORBOARD-FUSSBODENBRETT-PLANCHER or-oder-ou	38+1 29+1	18x88 18x114	2670
R1	ROOFBOARD-DACHBRETT-DAKPLANK or-oder-of	59+1 45+1	18x88 18x114	3215
FF1	FLOOR FILLET-FUSSBODENLEISTE-BAGUETTE DE FINITION DE PLANCHER		18x35	12.5
GB1	GABLE BOARD-GIEBELBLENDE-GEVELPLANK	2	18x120	3290
GS1	ROOF FELT FILLET-GIEBELLEISTE-GEVELLIJST	2	18x70	3290
GS2	ROOF FELT FILLET-GIEBELLEISTE-GEVELLIJST	2	18x70	2530
EB1	EAVE BOARD-TRAUFBRETT-AFDEKPLANK	2	18x120	5060
ES1	EAVE SLAT-TRAUFENLEISTE-AFDEKLIJST	4	30x40	2530
SS1	STORM SLAT-STURMLEISTE-STORMLIJST	2	35x18	2160
SS2	STORM SLAT-STURMLEISTE-STORMLIJST	2	35x18	2050
PRN	POST REGULATOR-PFOSTEN REGLER- PIED MÉTALLIQUE RÉGLABLE POUR POTEAU	1		
	SCREWS-SCHRAUBEN-VIS FOR-FÜR-POUR PRN	8	ø6.0	45
	SCREWS-SCHRAUBEN-SCHROEF FOR-FÜR-VOOR SS1, SS2	12	ø6.0	60
	WASHER-SCHEIBE-SCHIJF FOR-FÜR-VOOR SS1, SS2	12	ø6.0	18
	NAIL-NAGEL-CLOUS FOR-FÜR-POUR FF1	32	ø2.0	40
	NAIL-NAGEL-NAGEL FOR-FÜR-VOOR F1, R1	600	ø2.5	60
	SCREWS-SCHRAUBEN-SCHROEF FOR-FÜR-VOOR GB1, GS1, EB1, ES1	96	ø4.5	50
	SCREWS-SCHRAUBEN-VIS 2x008, 025 FOR-FÜR-POUR	16	ø4.5	90
	SCREWS-SCHRAUBEN-SCHROEF FOR-FÜR-VOOR RB1	12	ø6.0	160

Kood 4471720	Materjal	File 4471720.dwg	Leht 10

Pos	Specification-Bestimmung-Omschrijving	Pcs	Profile (mm)	L (mm)
	DOUBLEDOOR-DOPPELTÜR-DUBBELE DEUR (right-rechts-rechts) AST_PRE P	1	1500	1850
	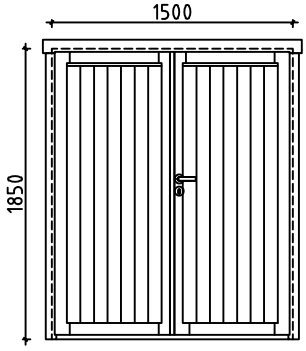	1		
		1		
		1		
		6		
	WINDOW-FENSTER-VENSTER (closed-feststehend-gesloten) AST_PRE	1	ø850	

Kood	4471720	Materjal	File	4471720.dwg	Leht	11