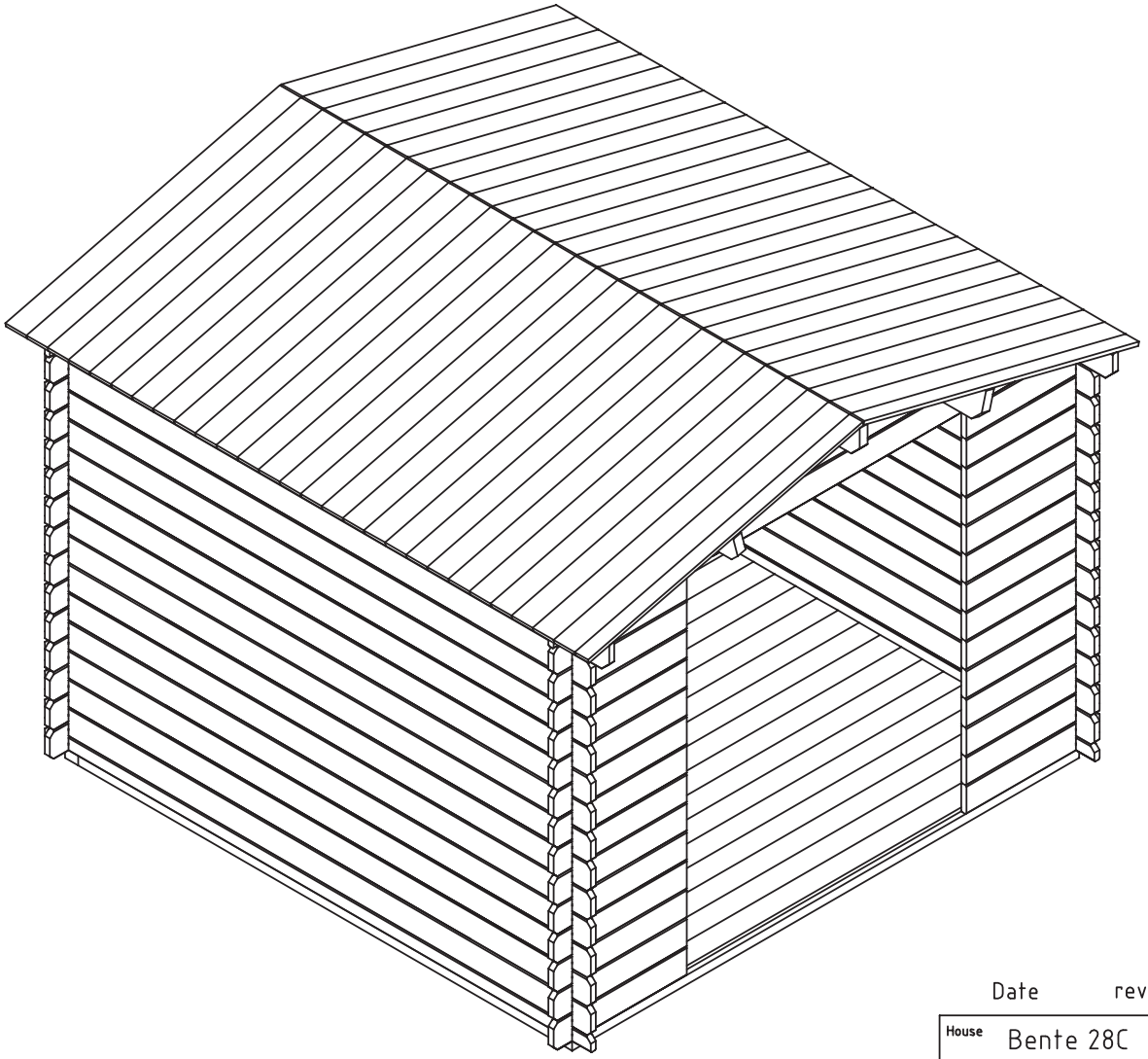

Date	rev.	Description	V 1.0

House	Bente 28C	Sheet	1
Drawing	3D	Scale	
Material	28x135	Date	17.09.2020
Drawer	K.K.	File	Bente 28C 3D.dwg

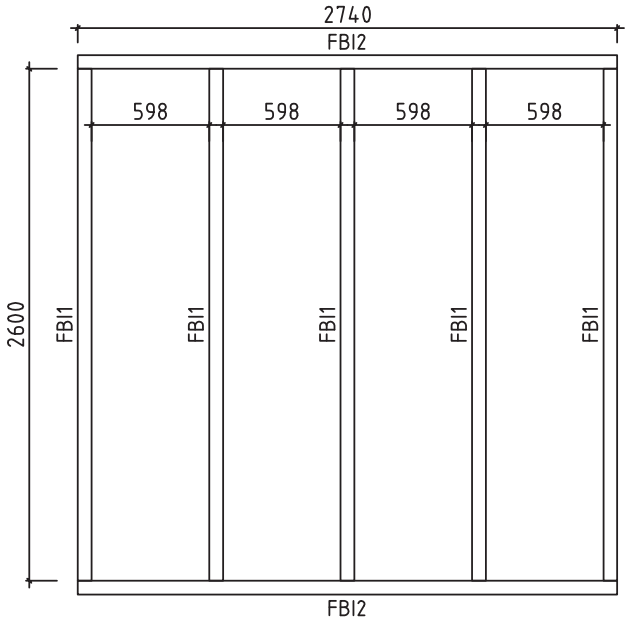

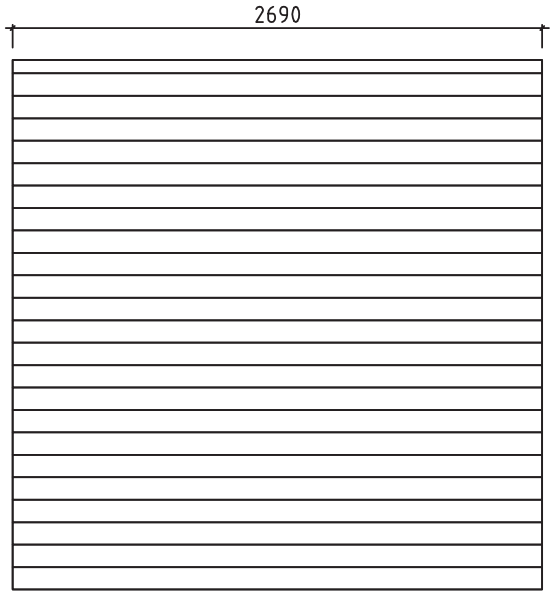

House	Bente 28C	Sheet	2
Drawing	FLOORBEAMS-FUSSBODENBALKEN-VLOERBALKEN	Scale	1:35
Material	70x45	Date	18.09.2020
Drawer	K.K.	File	Bente 28C.dwg

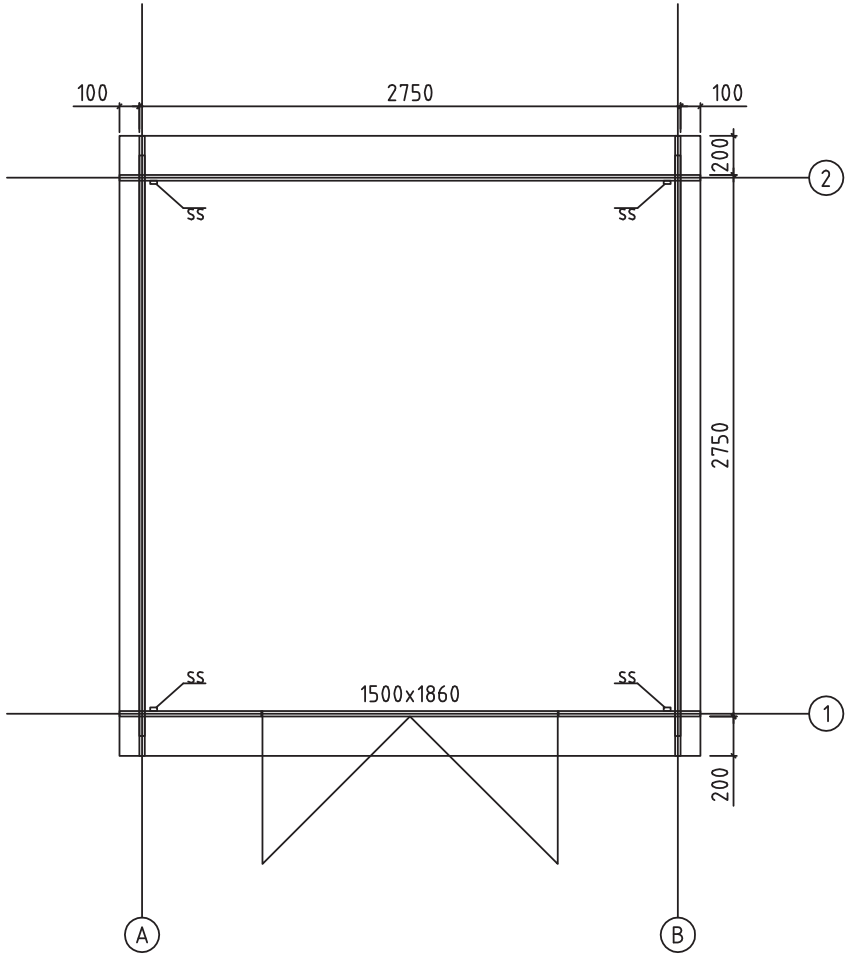

House	Bente 28C	Sheet	3
Drawing	Plan	Scale	1:35
Material	28x135	Date	18.09.2020
Drawer	K.K.	File	Bente 28C.dwg

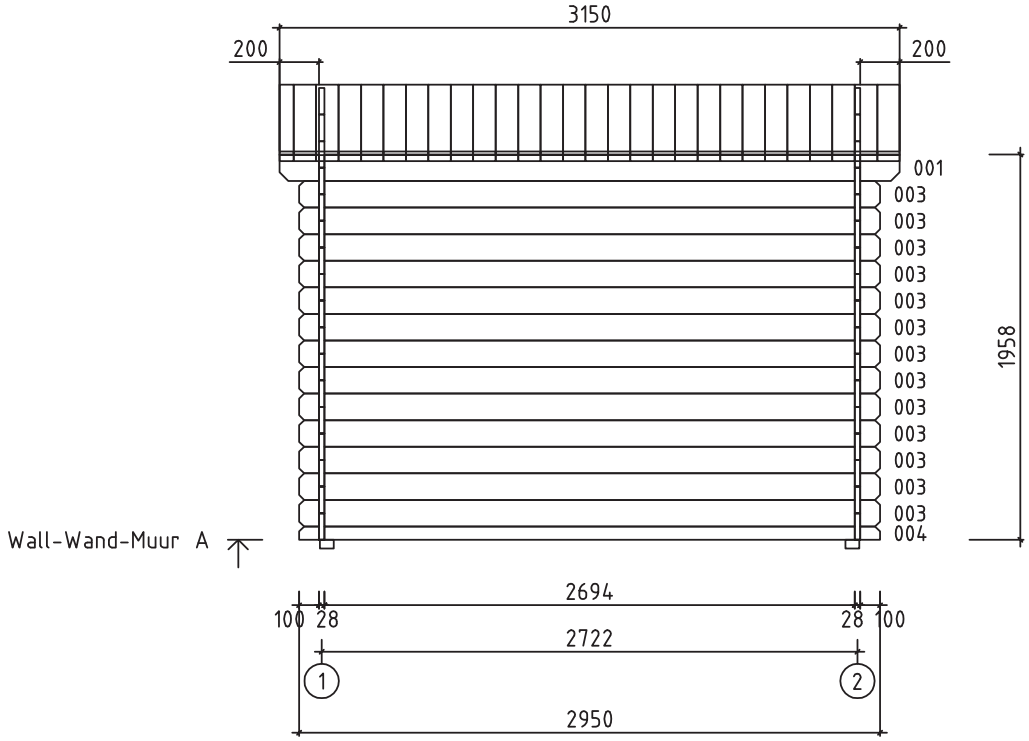

House	Bente 28C	Sheet	4
Drawing	WALL-WAND-MUUR A	Scale	1:35
Material	2.8x13.5	Date	18.09.2020
Drawer	K.K.	File	Bente 28C.dwg

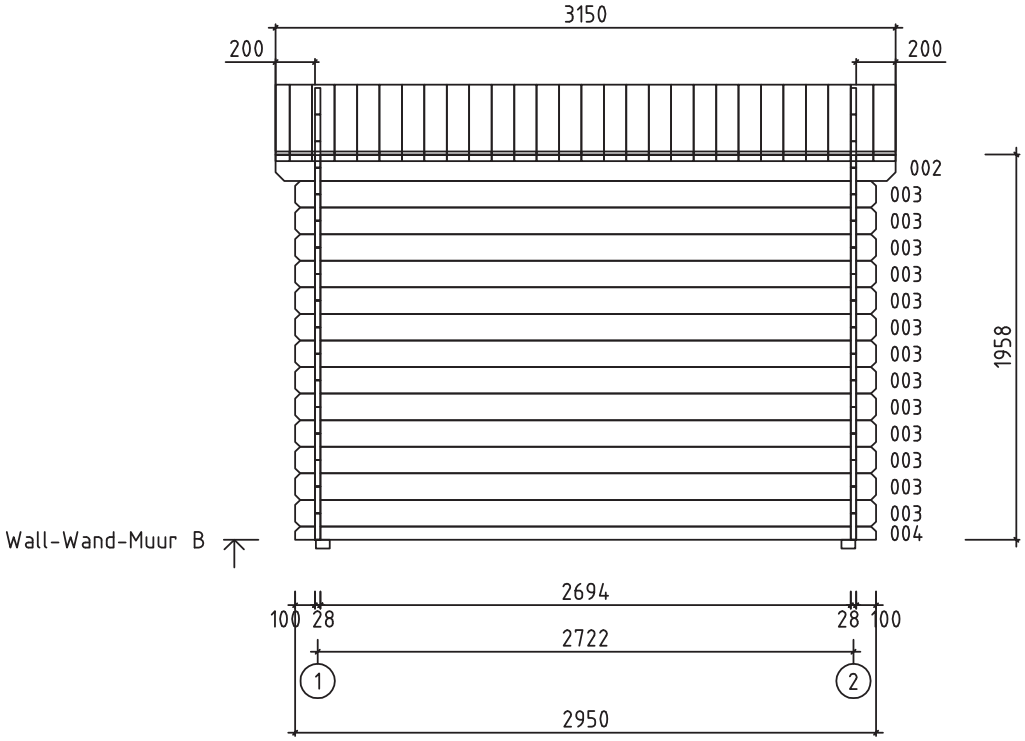

House	Bente 28C	Sheet	5
Drawing	WALL-WAND-MUUR B	Scale	1:35
Material	2.8x13.5	Date	18.09.2020
Drawer	K.K.	File	Bente 28C.dwg

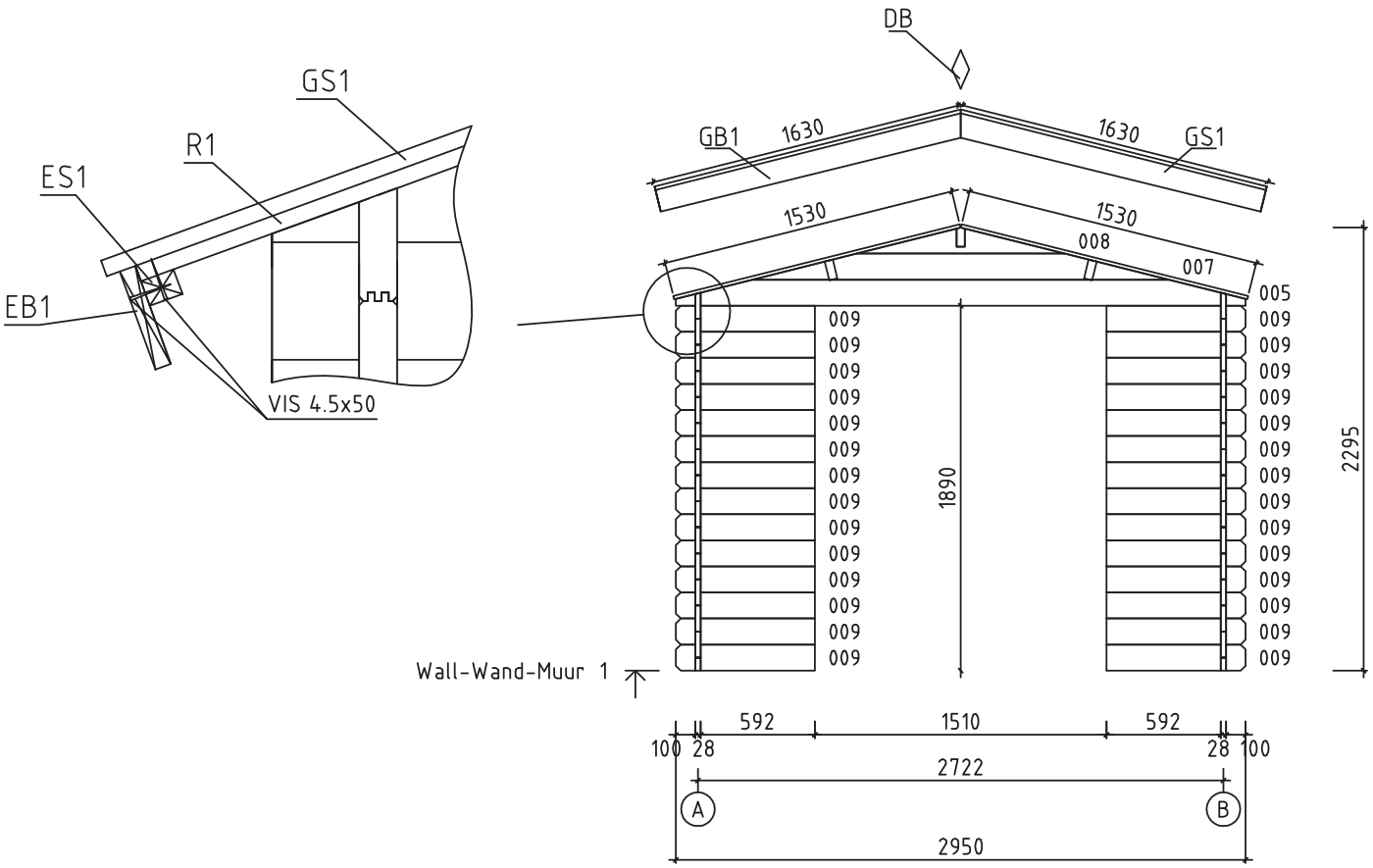

House	Bente 28C	Sheet	6
Drawing	WALL-WAND-MUUR 1	Scale	1:35
Material	2.8x13.5	Date	18.09.2020
Drawer	K.K.	File	Bente 28C.dwg

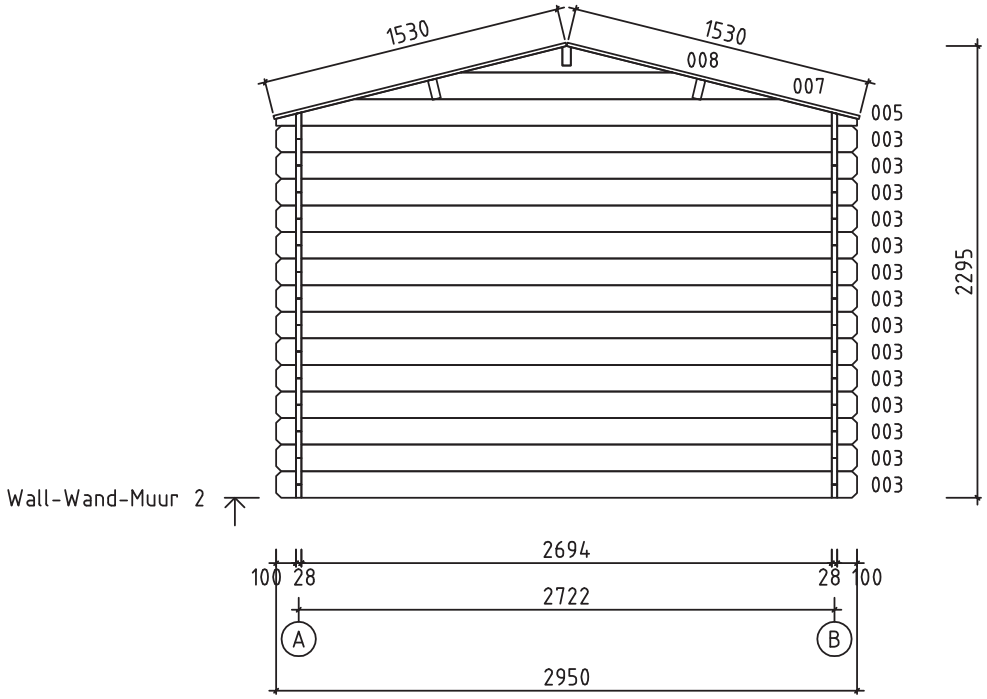

House	Bente 28C	Sheet	7
Drawing	WALL-WAND-MUUR 2	Scale	1:35
Material	2.8x13.5	Date	18.09.2020
Drawer	K.K.	File	Bente 28C.dwg

Pos	Specification-Bestimmung-Omschrijving Bente 28C	Pcs	Profile (mm)	L (mm)
001	200 2694 200	1	28x135	3150
002	200 2694 200	1	28x135	3150
003	100 2694 100	40	28x135	2950
004	100 2694 100	2	28x68	2950
006	SPARE BEAM-ERZATZBOHLE-VOORRAADPLANK	1	28x135	2950
009	592 100	28	28x135	720
W1-1	400 008 007 005 2950	1	28x400	2950
W2-1	400 008 007 005 2950	1	28x400	2950
HB	HIT BLOCK-SCHLAGHÖLZER-BLAZENPLANK	2	28x135	300
FBI2	FLOORBEAMS-FUSSBODENBALKEN-VLOERBALKEN IMM	2	70x45	2740
FBI1	FLOORBEAMS-FUSSBODENBALKEN-VLOERBALKEN IMM	5	70x45	2600
RB1	ROOFBEAMS-DACHBALKEN-DAKBALK 200 2694 200	2	43x140	3150
RB2	ROOFBEAMS-DACHBALKEN-DAKBALK 200 2694 200	1	43x140	3150
F	FLOORBOARD-FUSSBODENBRETT-VLOERPLANK or-oder-of	32+1 24+1	18x88 18x114	2690
R	ROOFBOARD-DACHBRETT-DAKPLANK or-oder-of	73+1 56+1	18x88 18x114	1530
FF	FLOOR FILLET-FUSSBODENLEISTE-VLOERPLINT		18x35	11.0
GB	GABLE BOARD-GIEBELBLENDE-GEVELPLANK 1630 1600	4	18x120	1630
GS1	ROOF FELT FILLET-GIEBELLEISTE-GEVELLIJST	4	18x70	1630
EB1	EAVE BOARD-TRAUFBRETT-AFDEKPLANK	2	18x90	3150
ES1	EAVE SLAT-TRAUFENLEISTE-AFDEKLIJST	2	30x40	3150
DB1	DIAMOND-RAUTE-DIAMANT	2	18x90	200
SS	STORM SLAT-STURMLEISTE-STORMLIJST	4	18x35	1950
	SCREWS-SCHRAUBEN-SCHROEF (FOR-FÜR-VOOR STORM SLAT-STURMLEISTE-STORMLIJST)	12	ø6	50

Kood	Bente 28C	Materjal	File	Bente 28C.dwg	Leht	8

Pos	Specification-Bestimmung-Omschrijving Bente 28C	Pcs	Profile (mm)	L (mm)
	WASHER-SCHEIBE-SCHIJF (FOR-FÜR-VOOR STORM SLAT-STURMLEISTE-STORMLIJST)	12	⌀6	
	NAIL-NAGEL-CLOUS FOR-FÜR-POUR FF1	30	⌀2.0	40
	NAIL-NAGEL-CLOUS FOR-FÜR-POUR F1, R1	360	⌀2.5	60
	SCREWS-SCHRAUBEN-VIS FOR-FÜR-POUR GB1, GS1, EB1, ES1, DB1	70	⌀4.5	50
	SCREWS-SCHRAUBEN-VIS 2x004 FOR-FÜR-POUR FBI1, FBI2	35	⌀4.5	90
	SCREWS-SCHRAUBEN-VIS FOR-FÜR-POUR RB1, RB2	6	⌀6.0	160
	DOUBLEDOOR-DOPPELTÜR-DUBBELE DEUR (right-rechts-rechts) AST_Basic P.P.	1	1500	1860

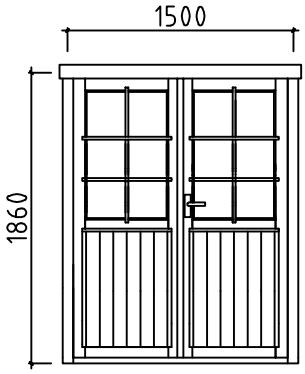

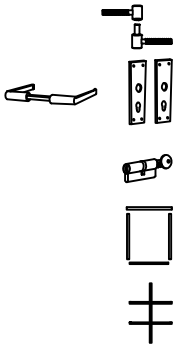

6
1
1
1
2

Kood	Bente 28C	Materjal	File	Bente 28C.dwg	Leht	9