Sauna 400, D 200

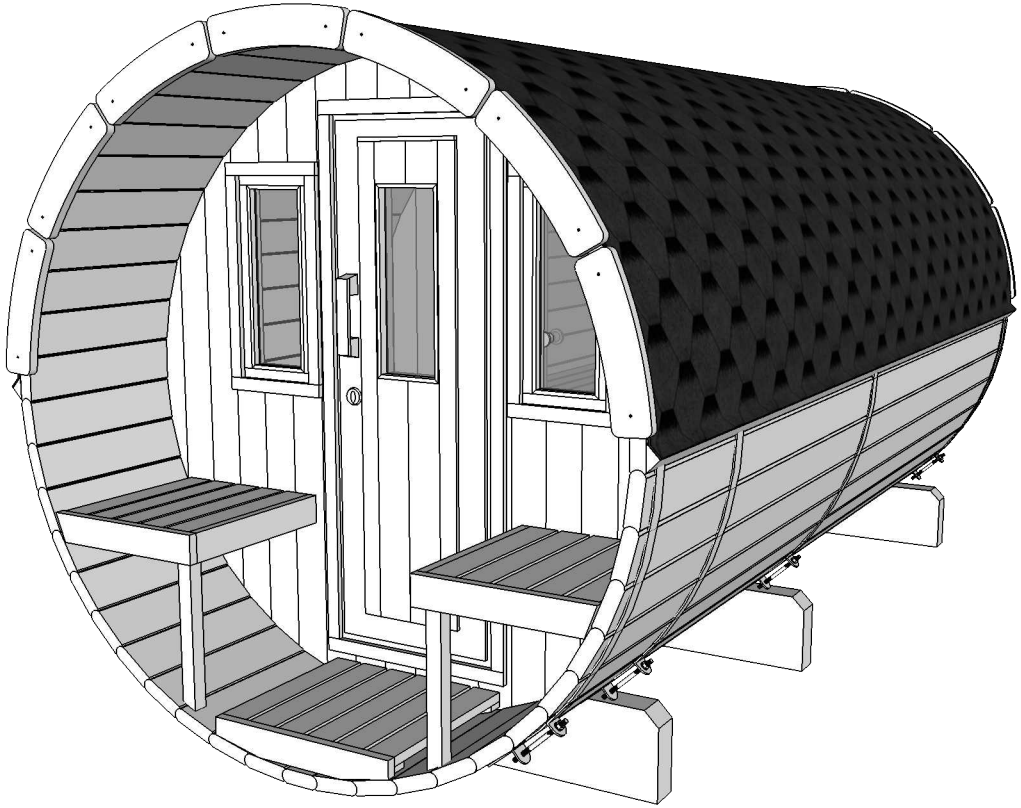

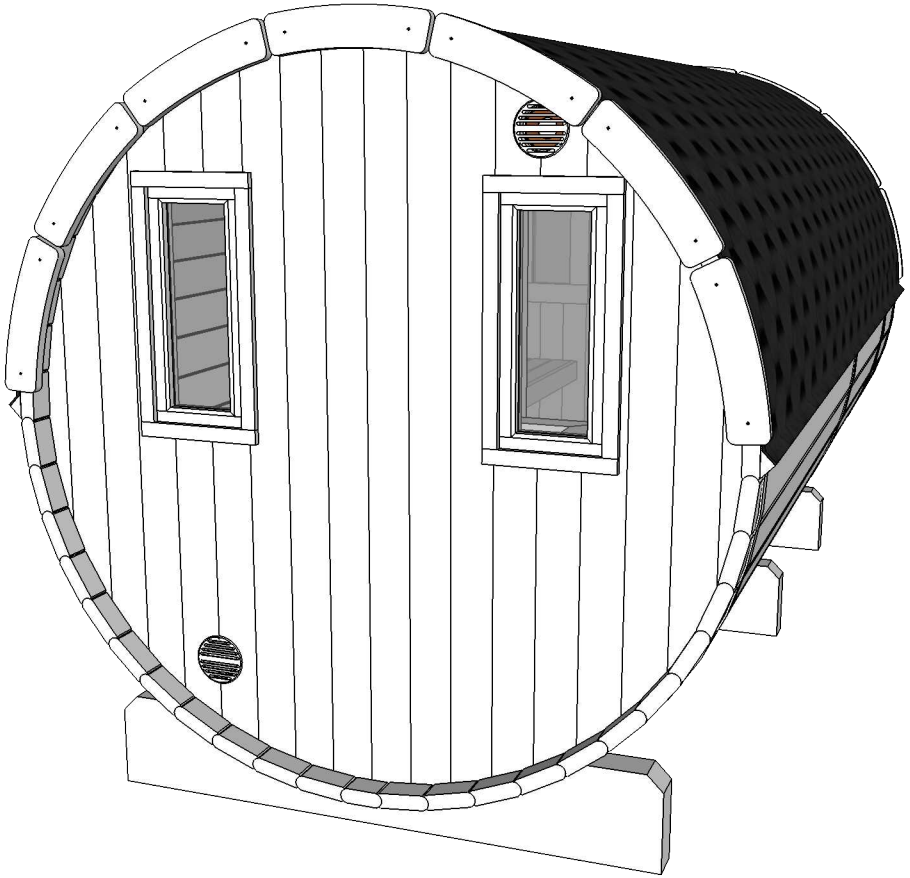

(IN200008)

SAUNA 400, D200

Details list Nr. 1

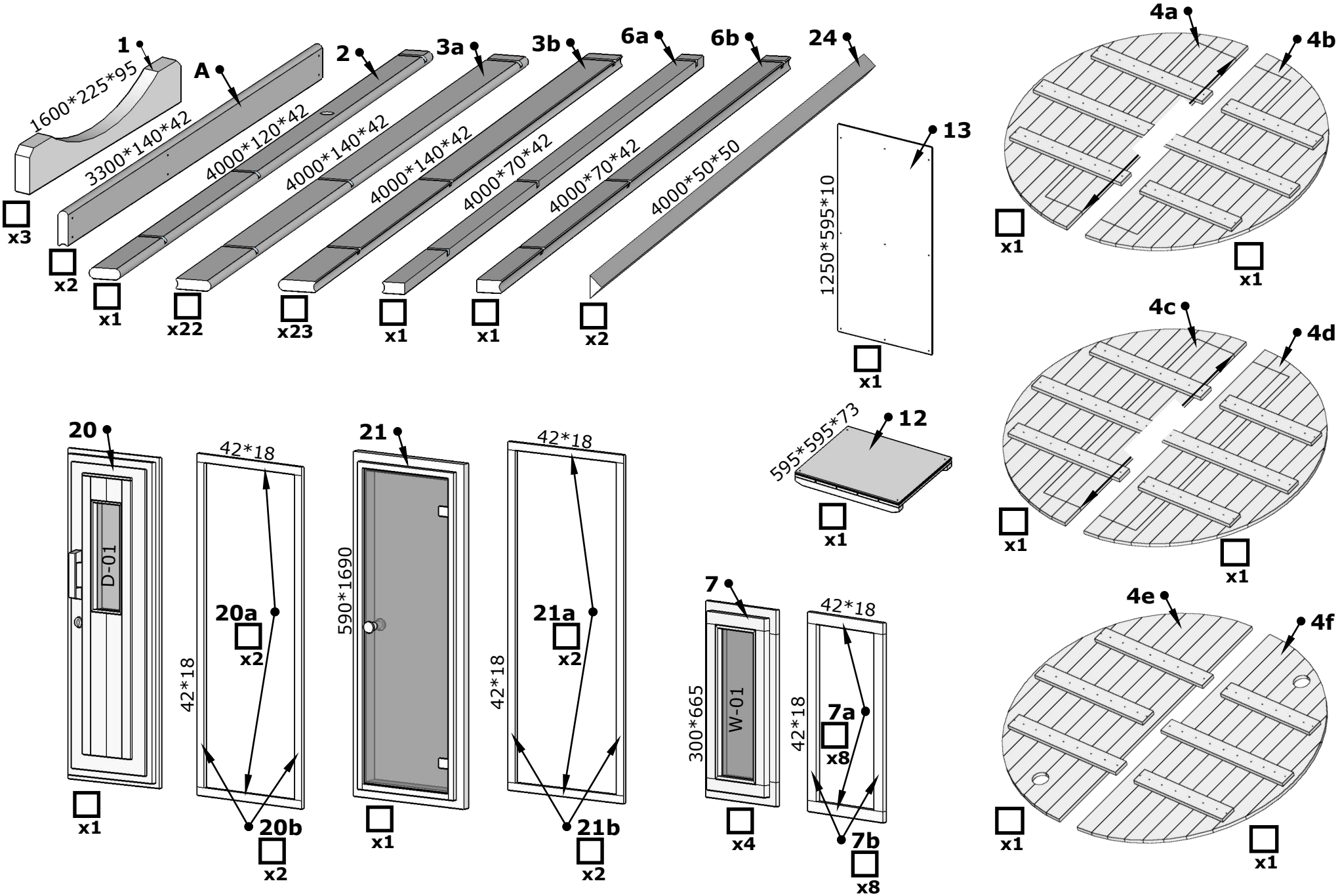

SAUNA 400, D200

Details list Nr. 2

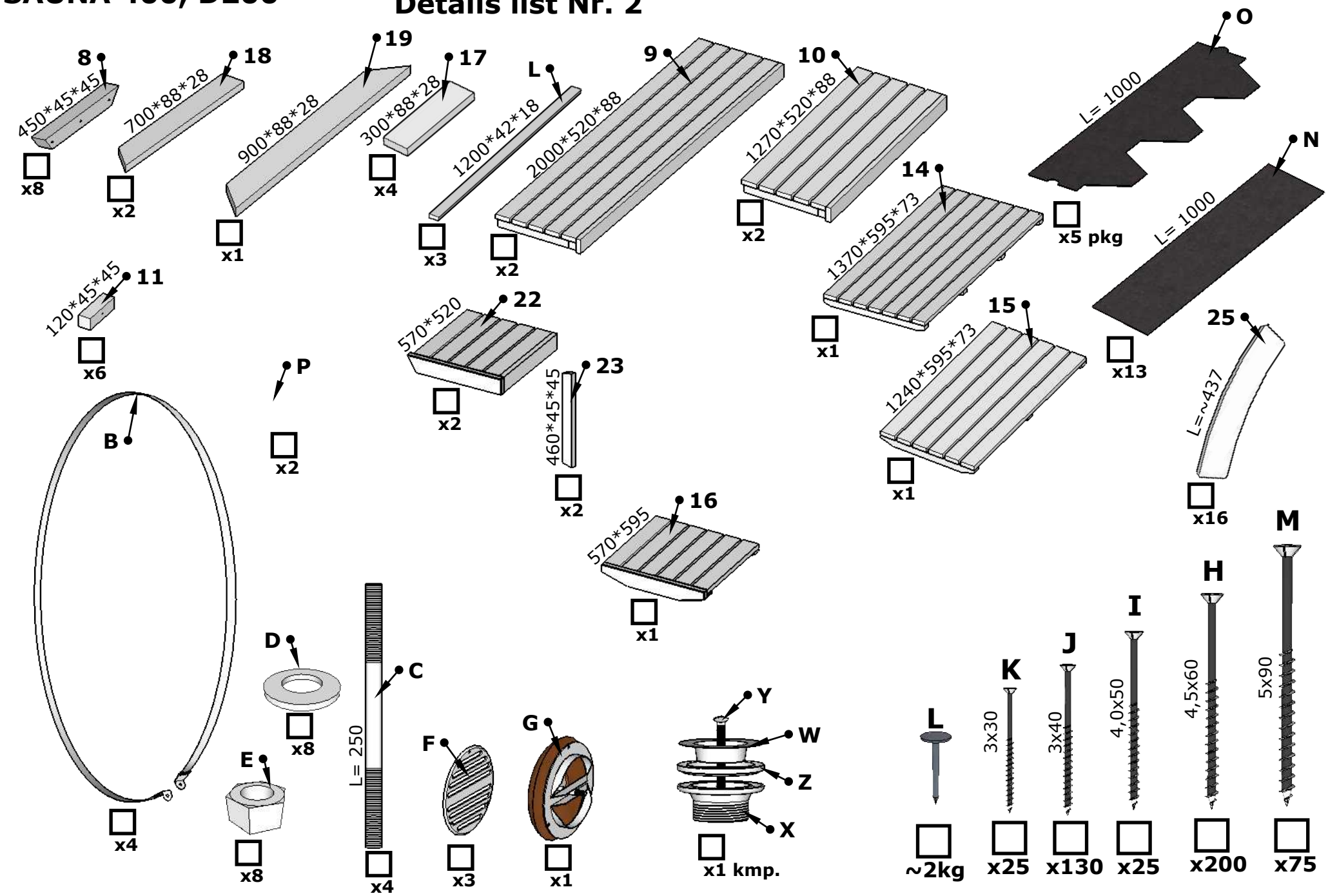

Sauna 400, D 200

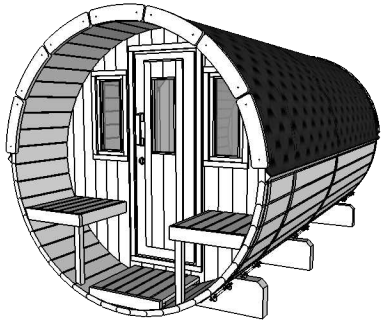

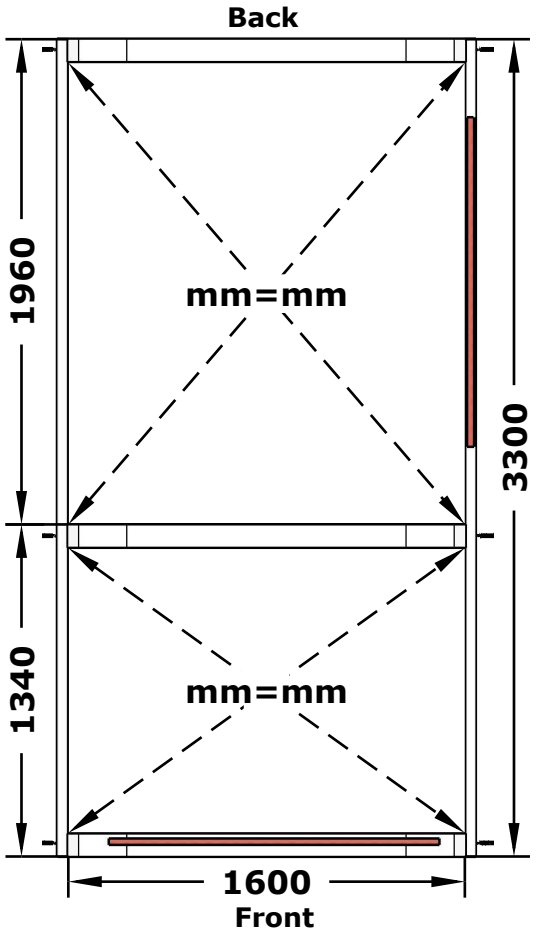

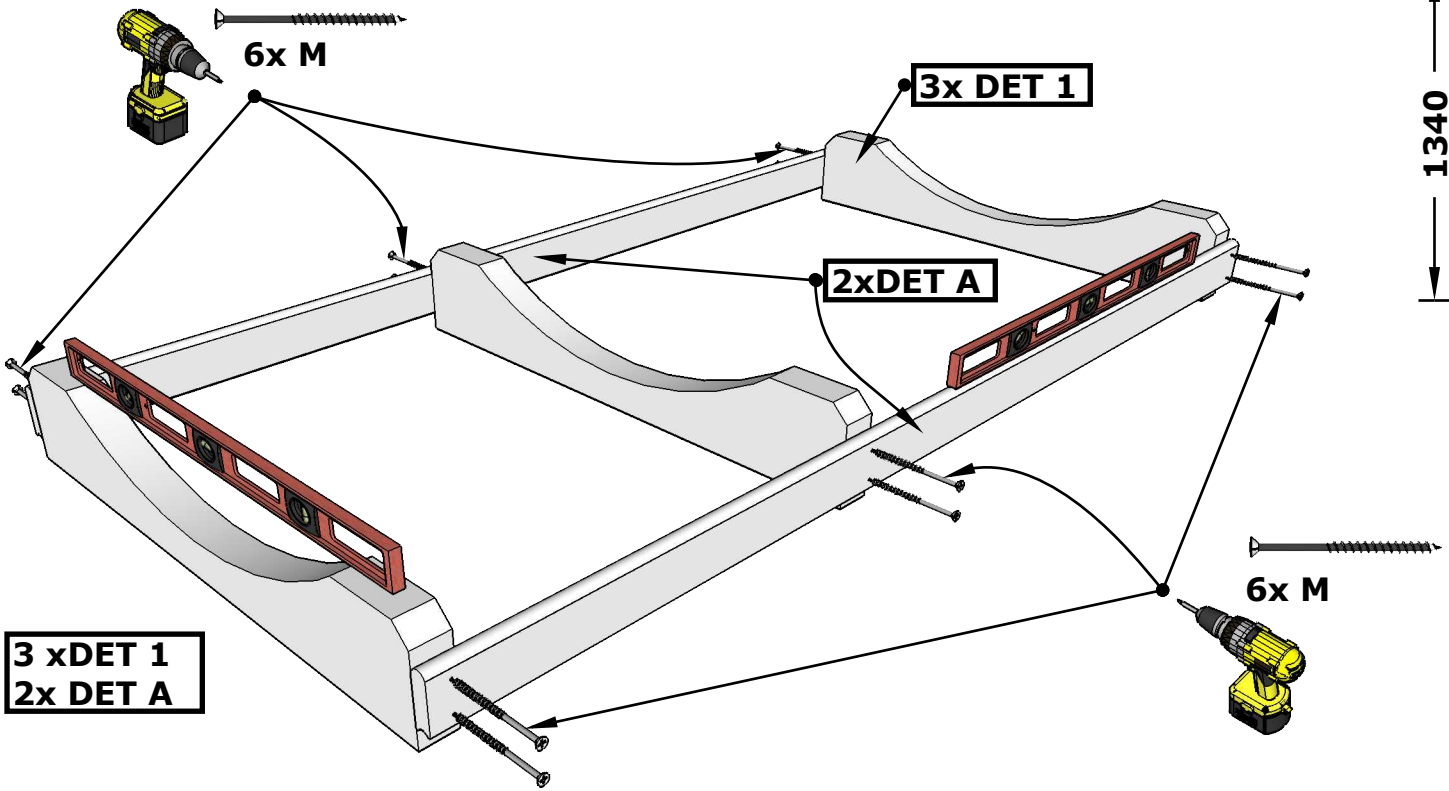

1.

Sauna 400, D 200

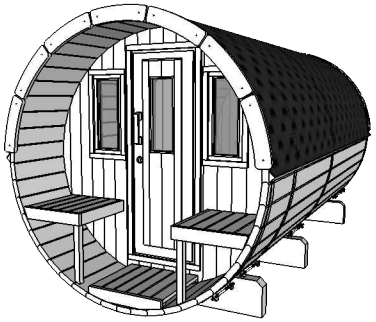

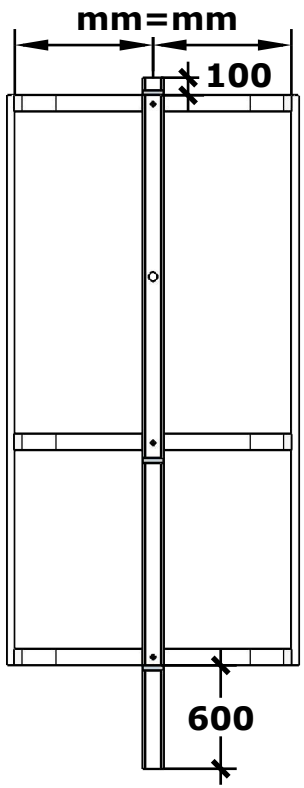

4 x DET 3a
4 x DET 3b

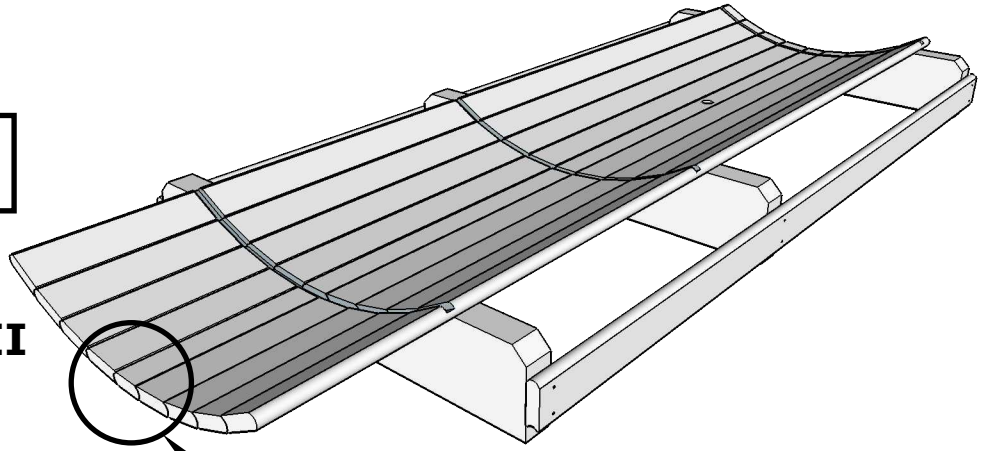

II

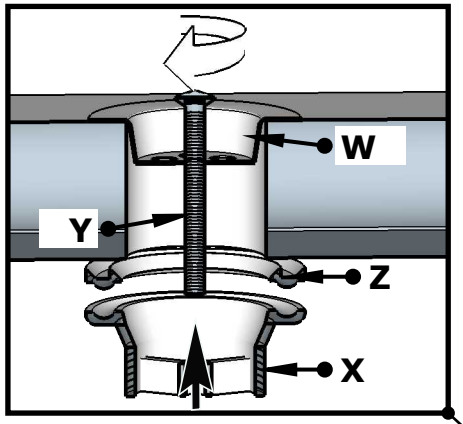

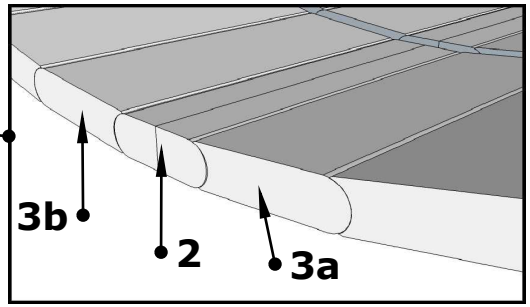

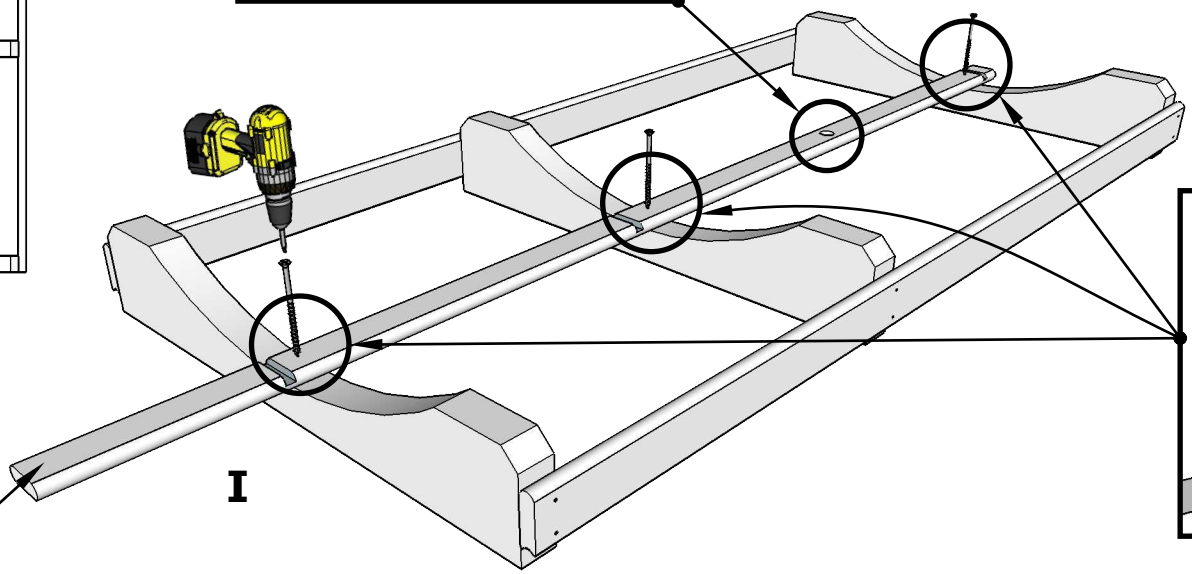

I

1x DET 2

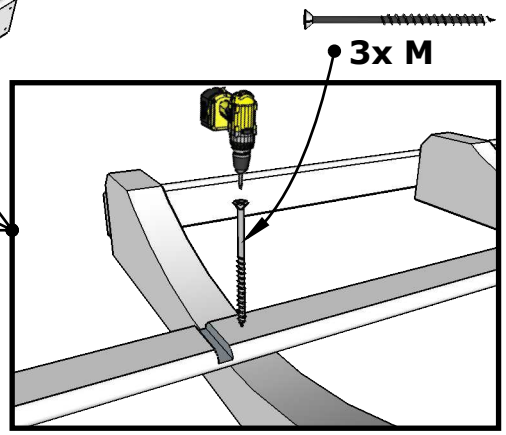

2.

Sauna 400, D 200

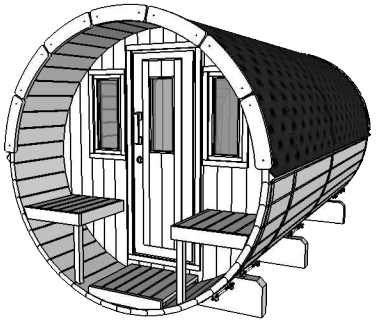

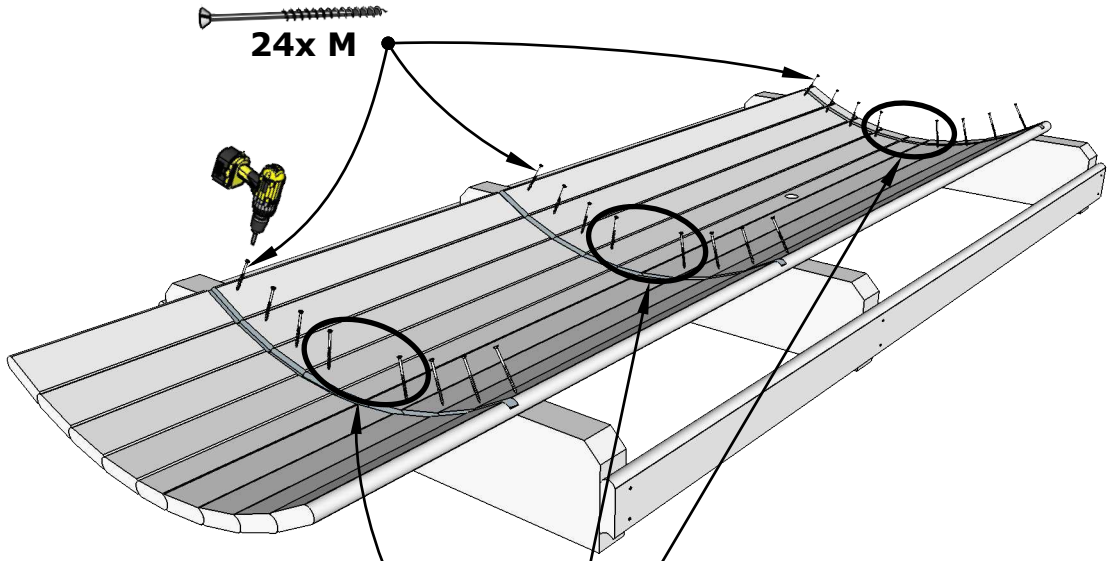

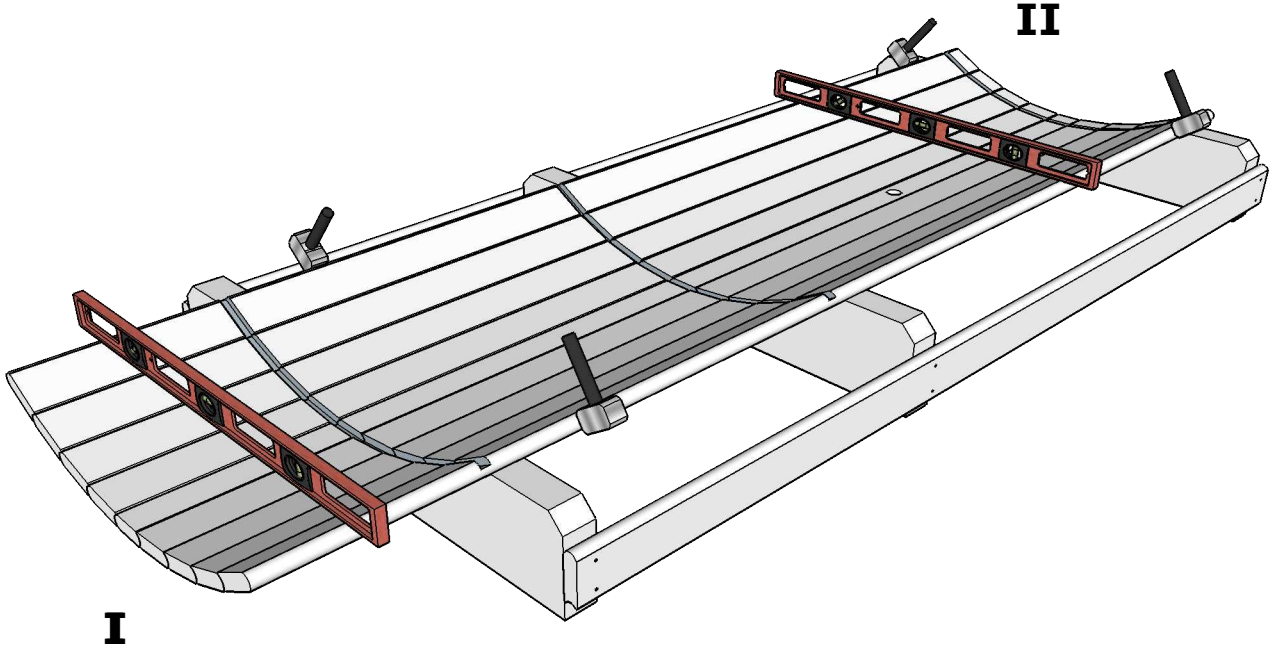

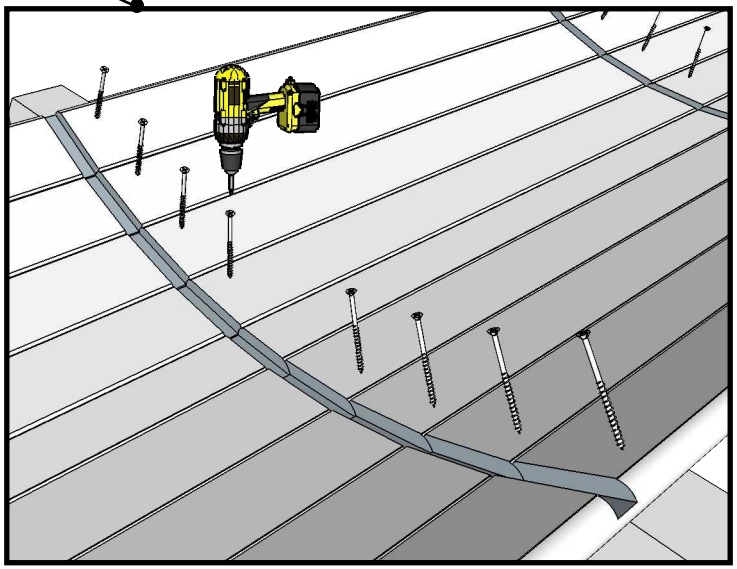

3.

(IN200008)

Sauna 400, D 200

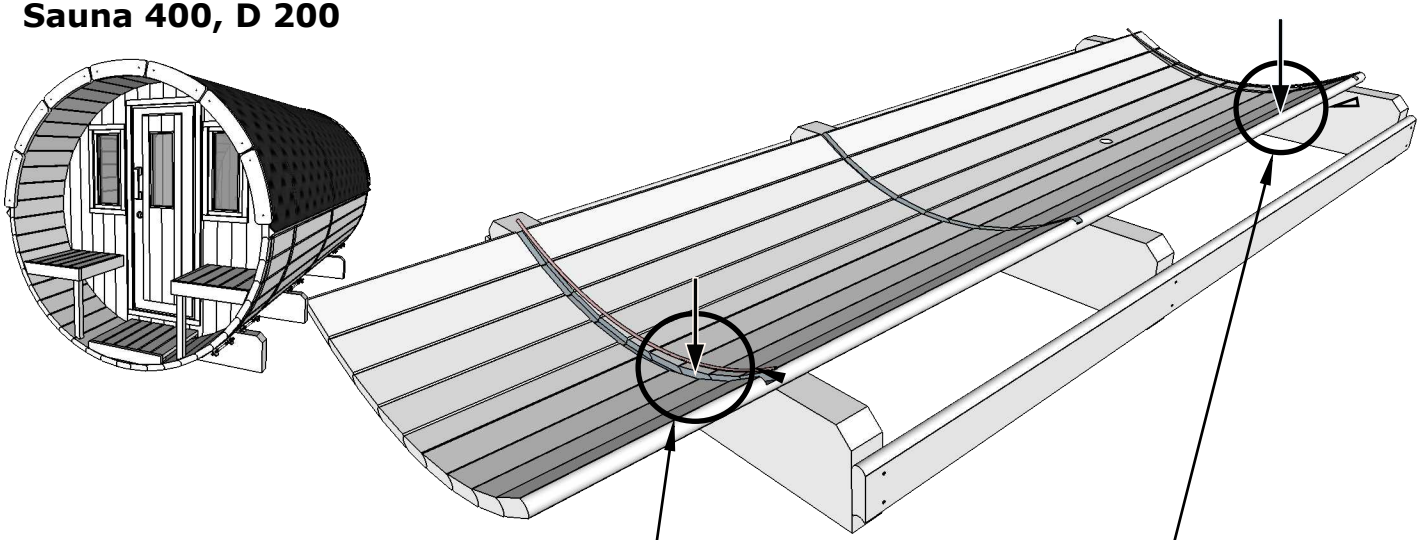

Drill 4 holes Ø10mm
into DET 2
(2 on each side)

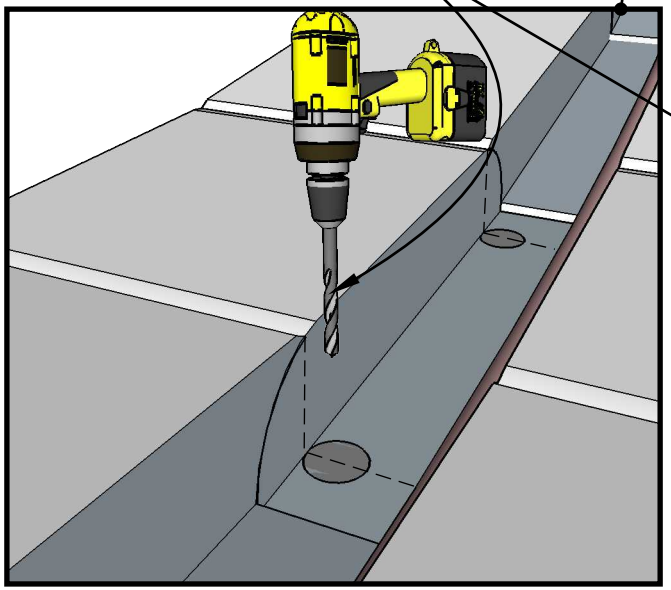

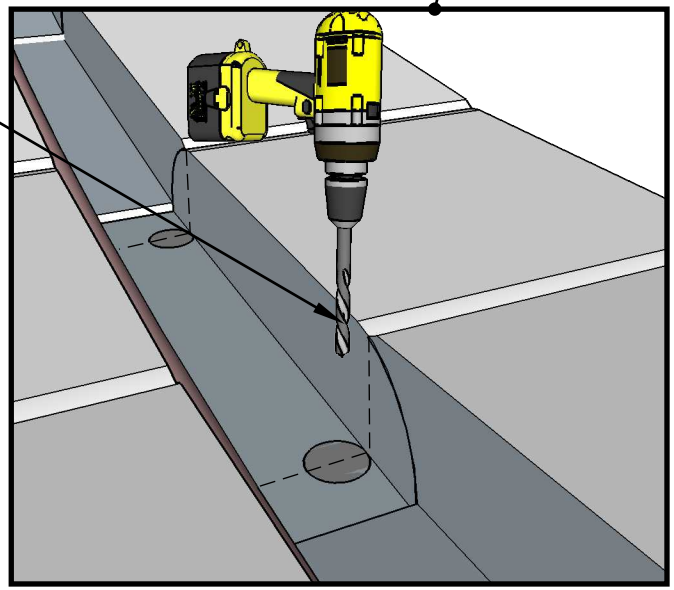

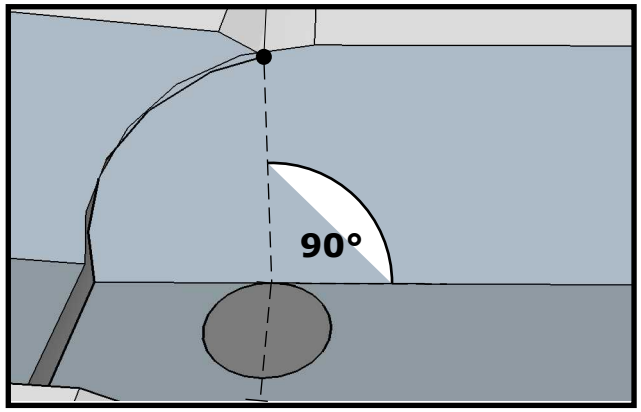

3A.

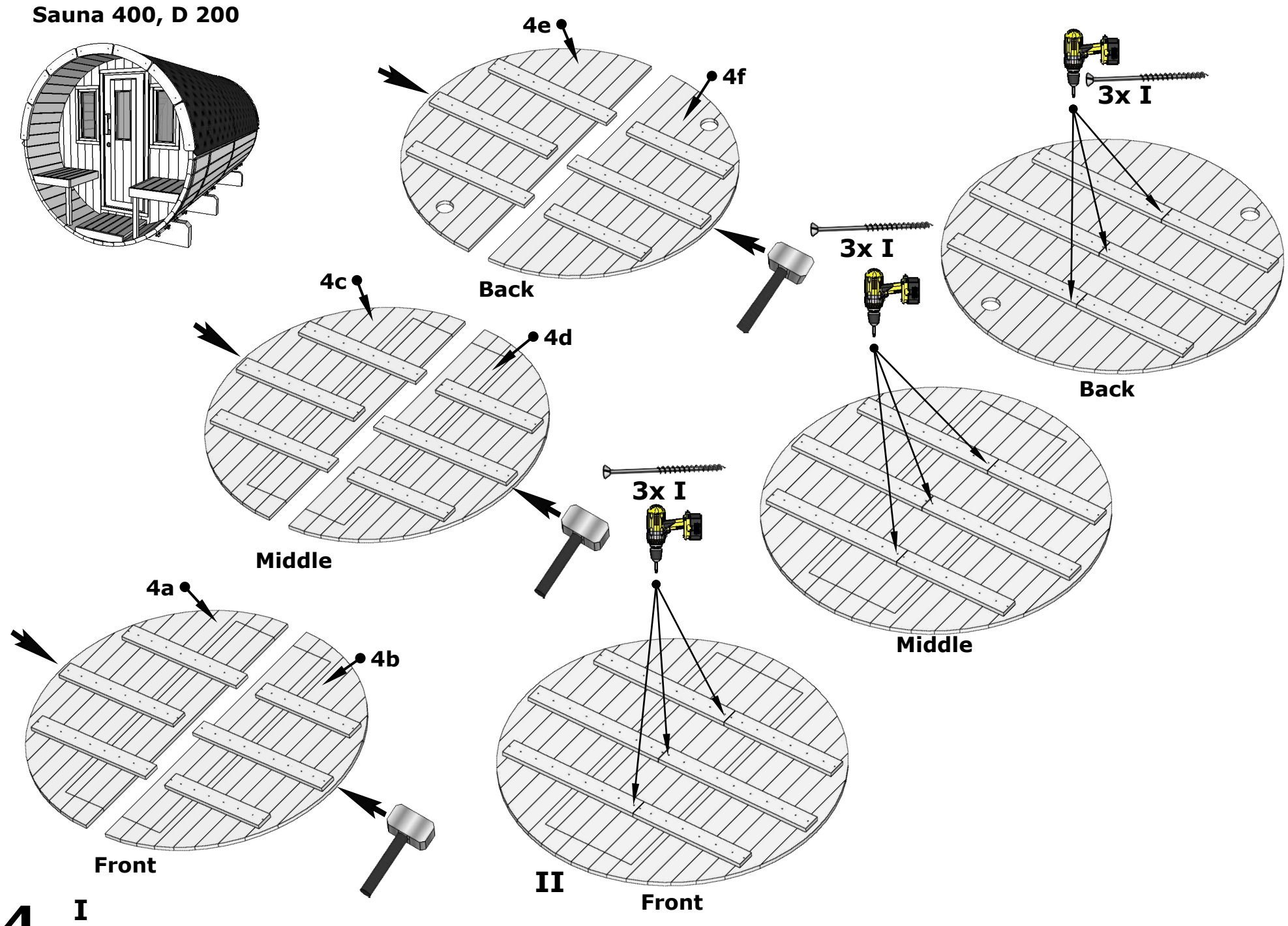
Sauna 400, D 200
4e
4f
Back
3x I
3x I
Back
4c
4d
Middle
3x I
Middle
4a
4b
Front
II
Front
4. I

Sauna 400, D 200

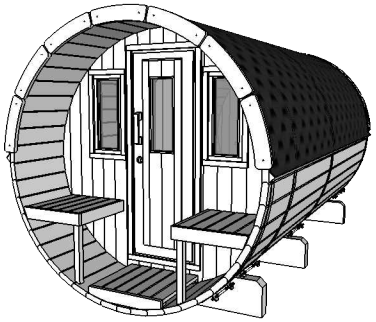

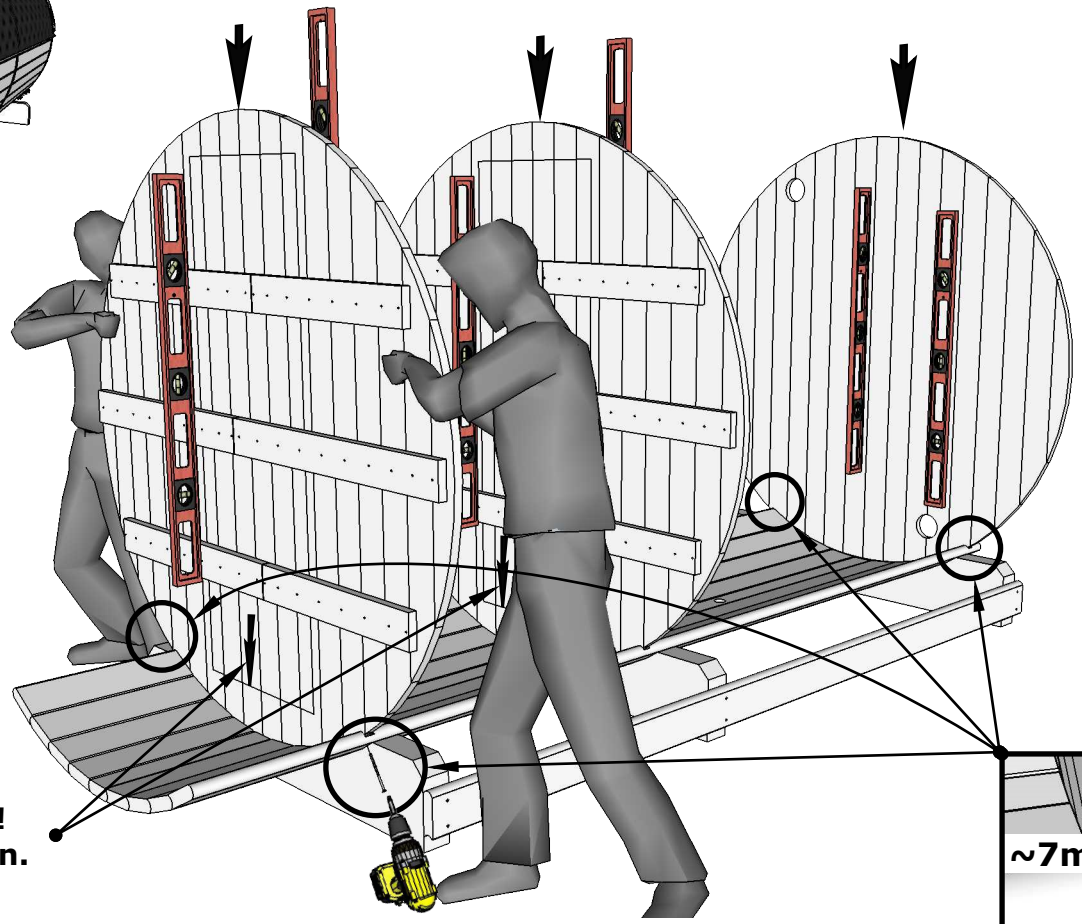

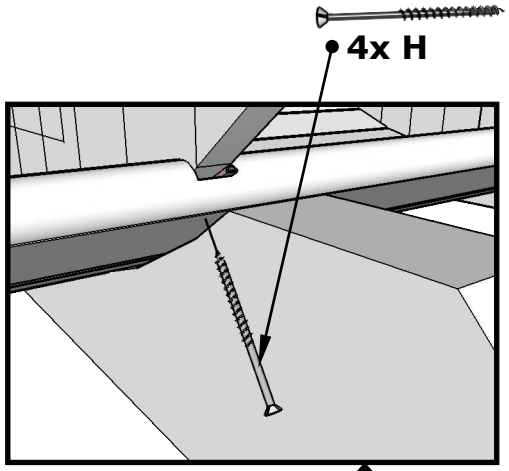

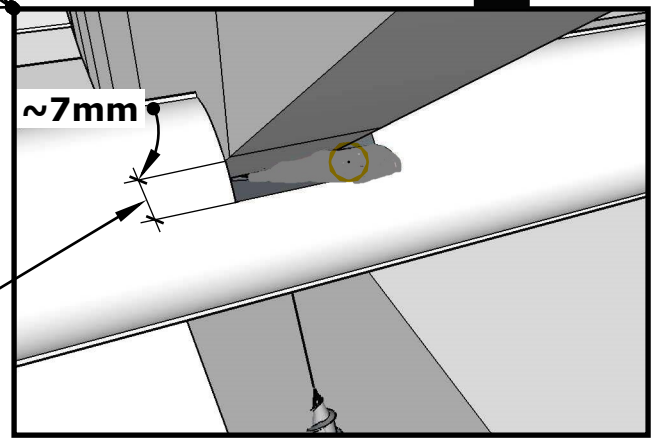

Attention!
Arrow down.

Attention!
Keep distance!
Do not leave a gap if
Sauna is made of thermowood.

5.

Sauna 400, D 200

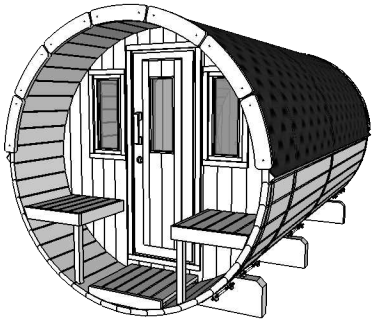

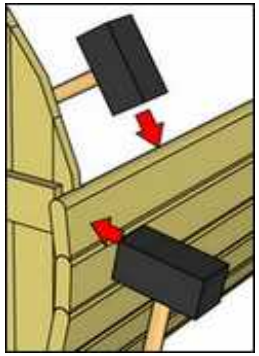

Watch page 6A

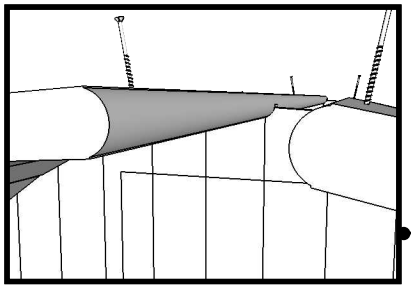

11x DET 3b
10x DET 3a

20xH

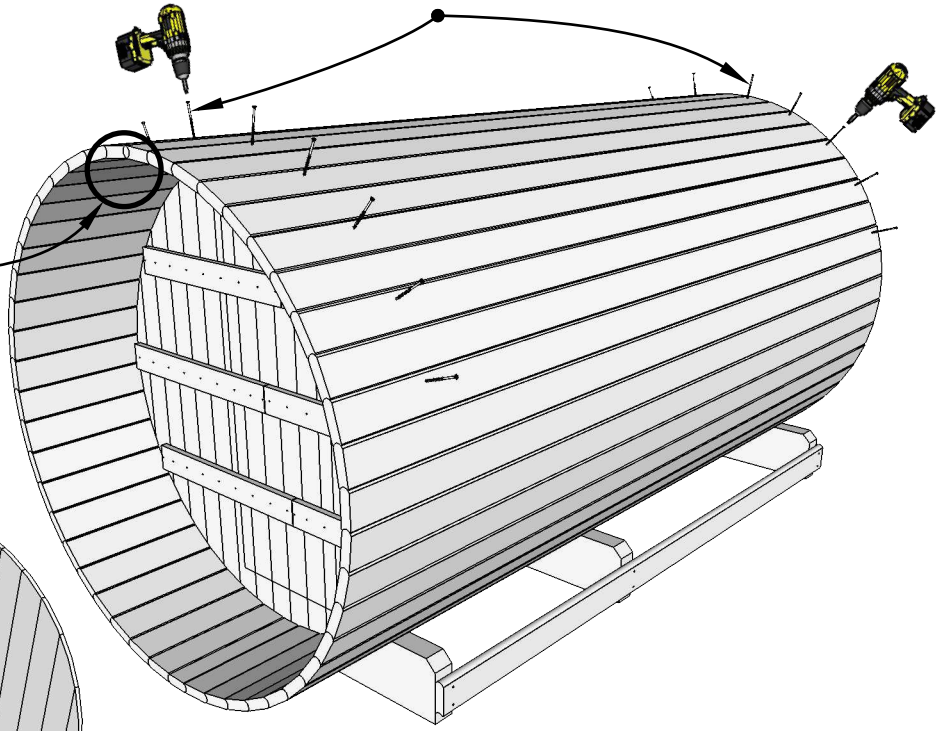

II

16xH

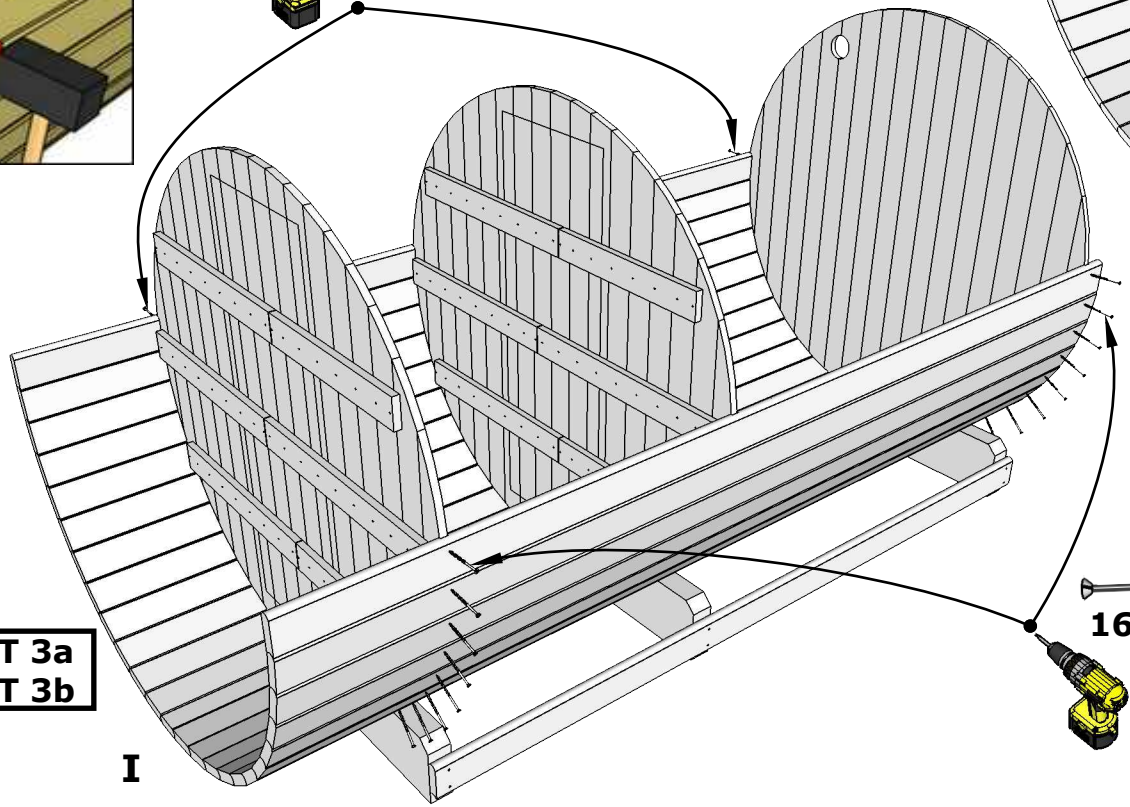

16xH

8x DET 3a
8x DET 3b

I

6.

Sauna 400, D 200

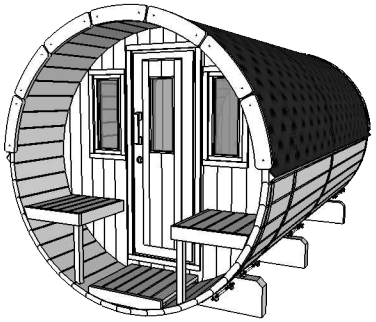

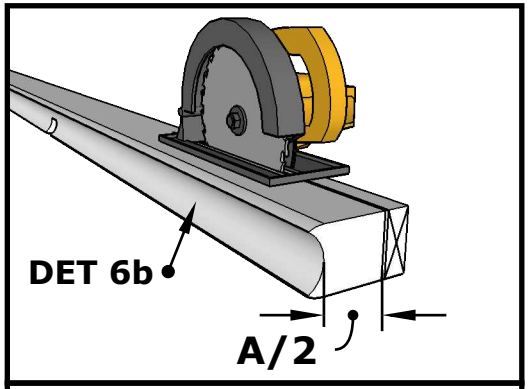

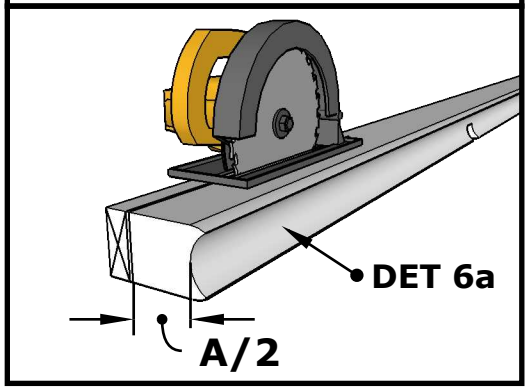

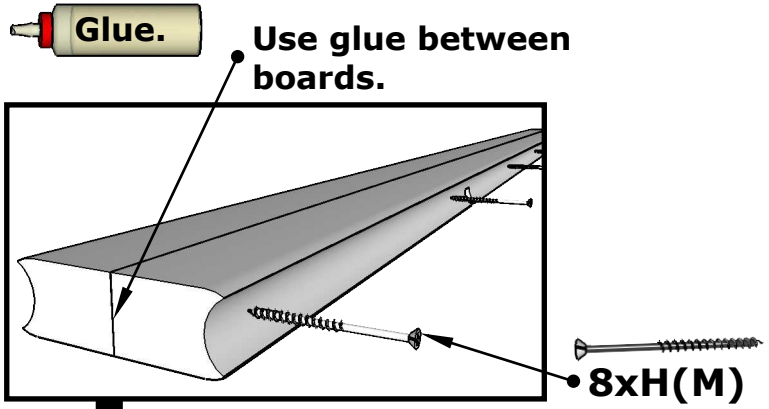

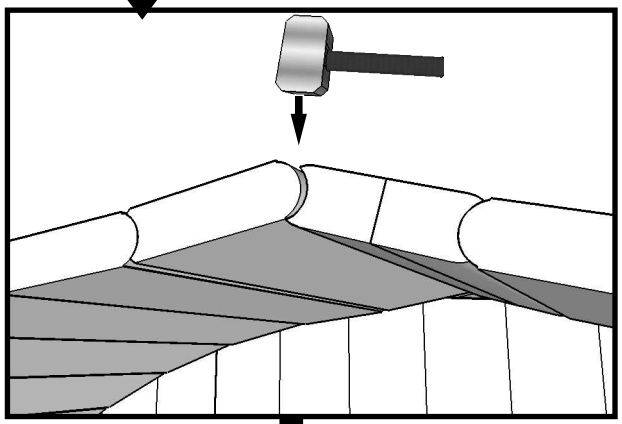

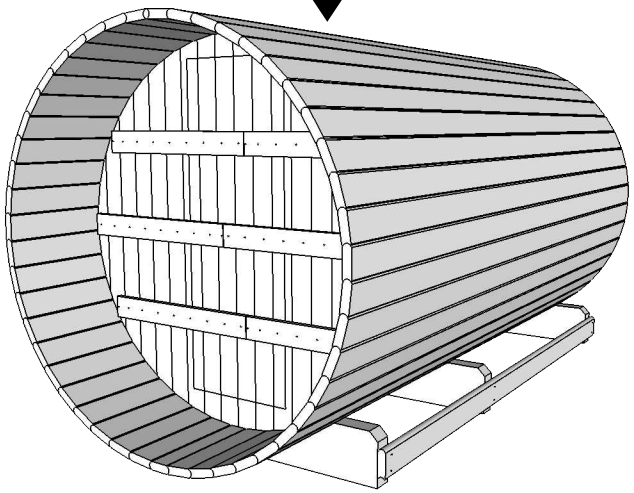

Attention!!!!

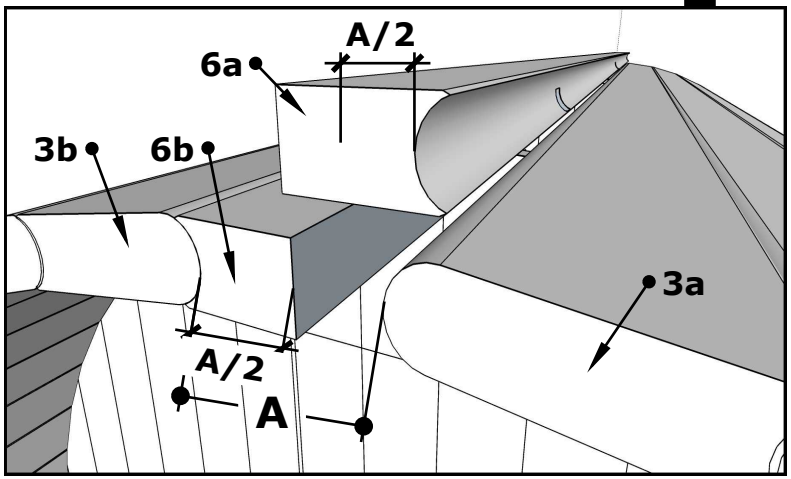

6A.

(IN200008)

Sauna 400, D 200

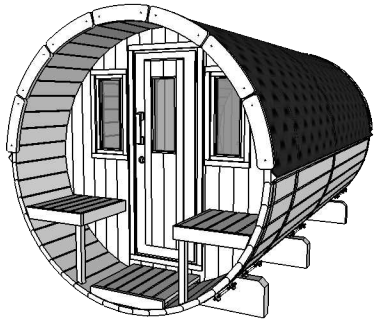

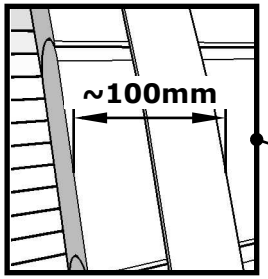

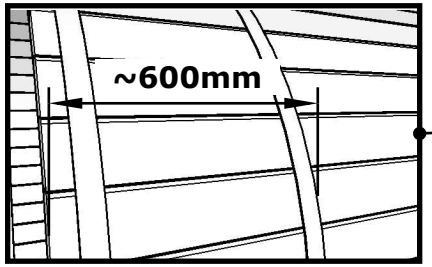

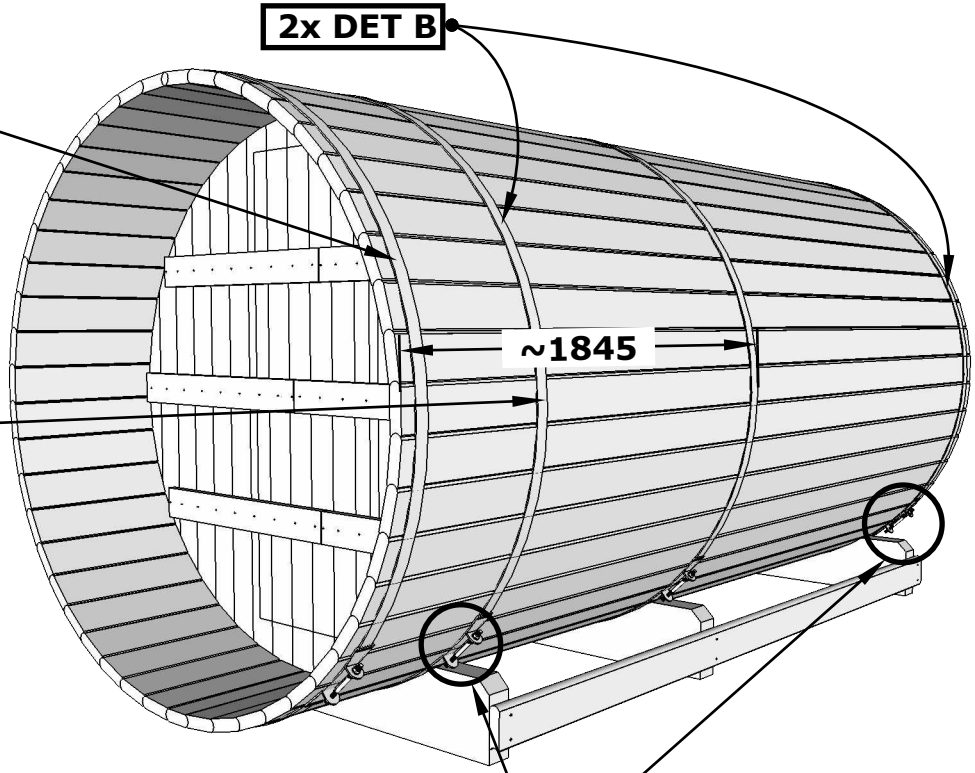

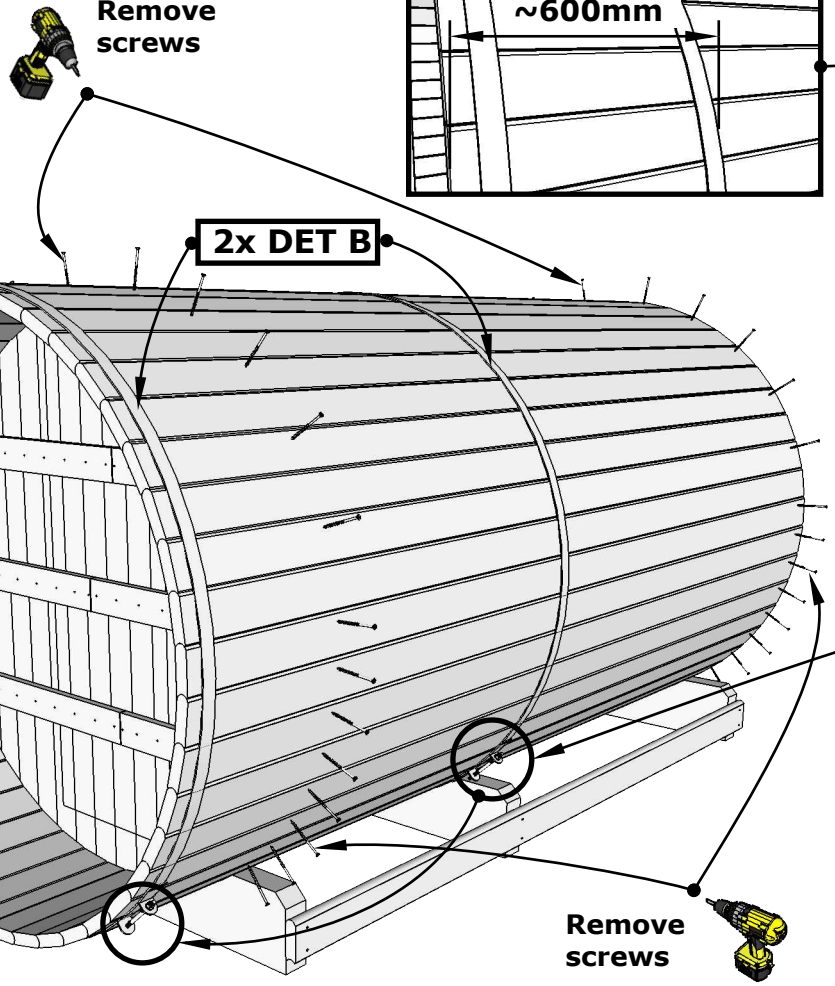

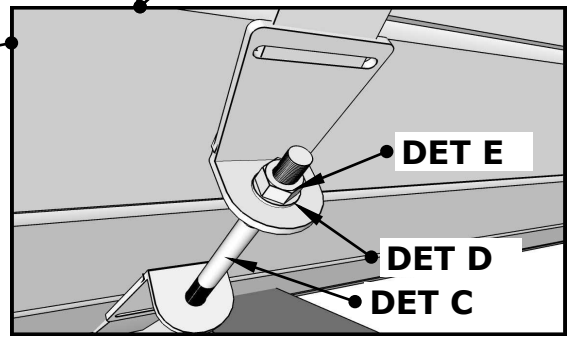

Attention! Do not remove screws, if sauna is made of thermowood.

During assembly and retightening the threaded rods, use oil (Würth HPS 1400 or similar) to avoid "cold welding" and it is also easier tightening.

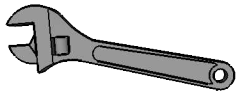

7.

Sauna 400, D 200

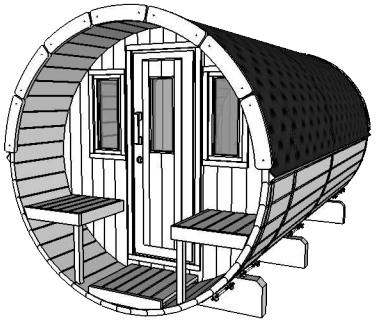

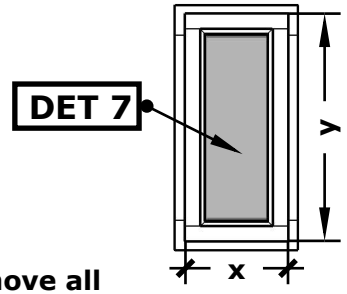

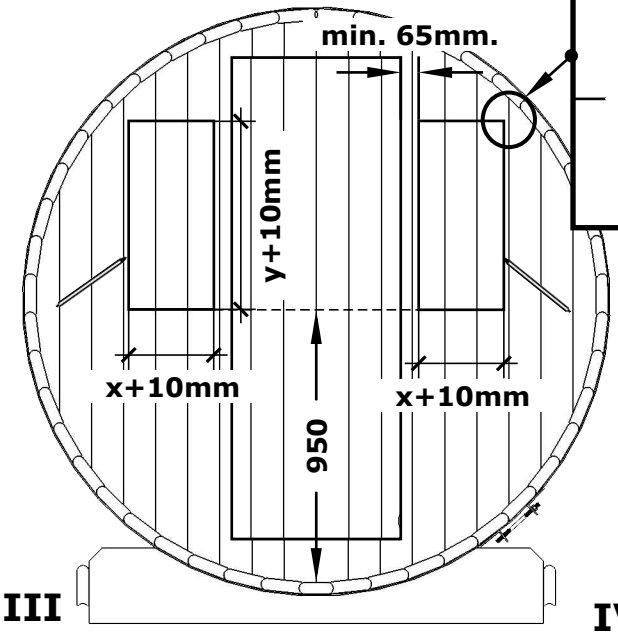

III

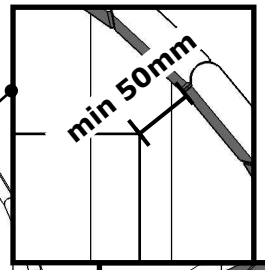

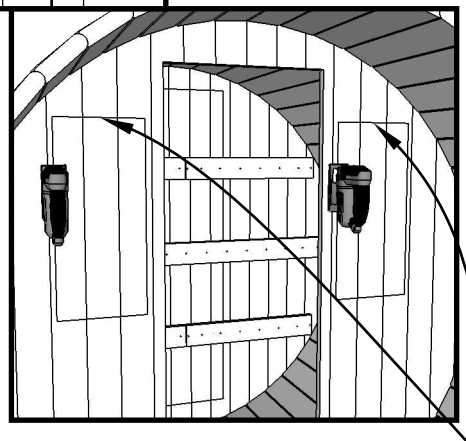

IV

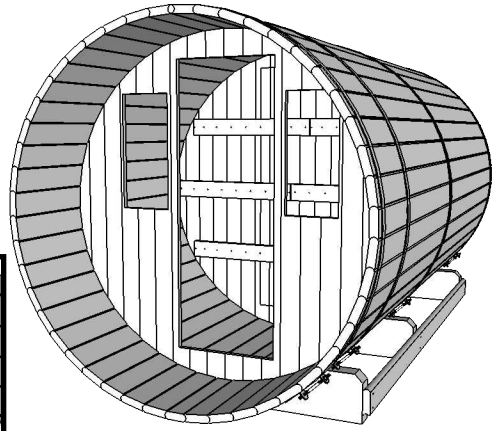

V

Remove all brackets

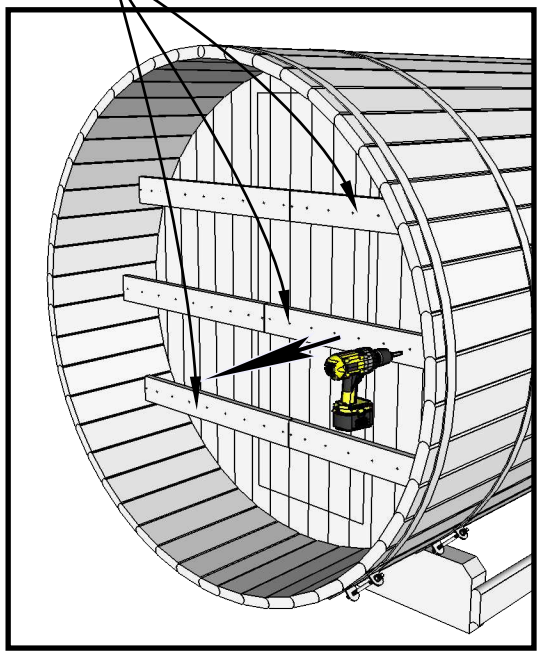

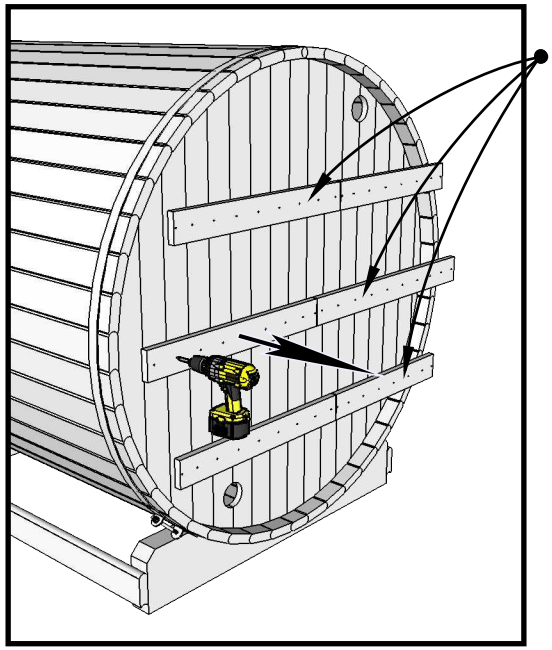

Remove all brackets

Follow the guidelines

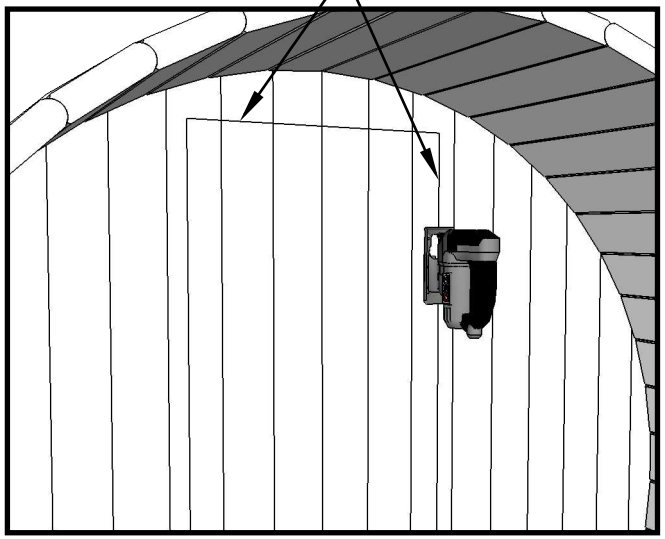

II

8. I

Sauna 400, D 200

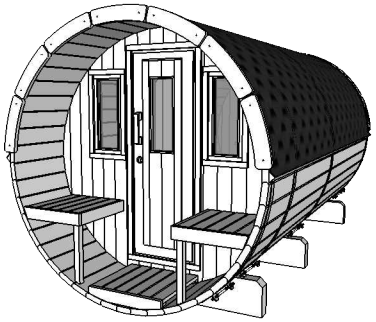

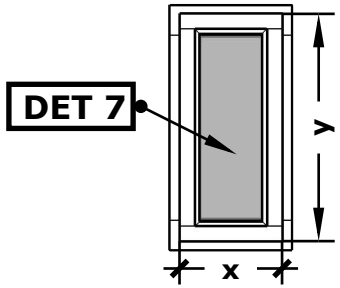

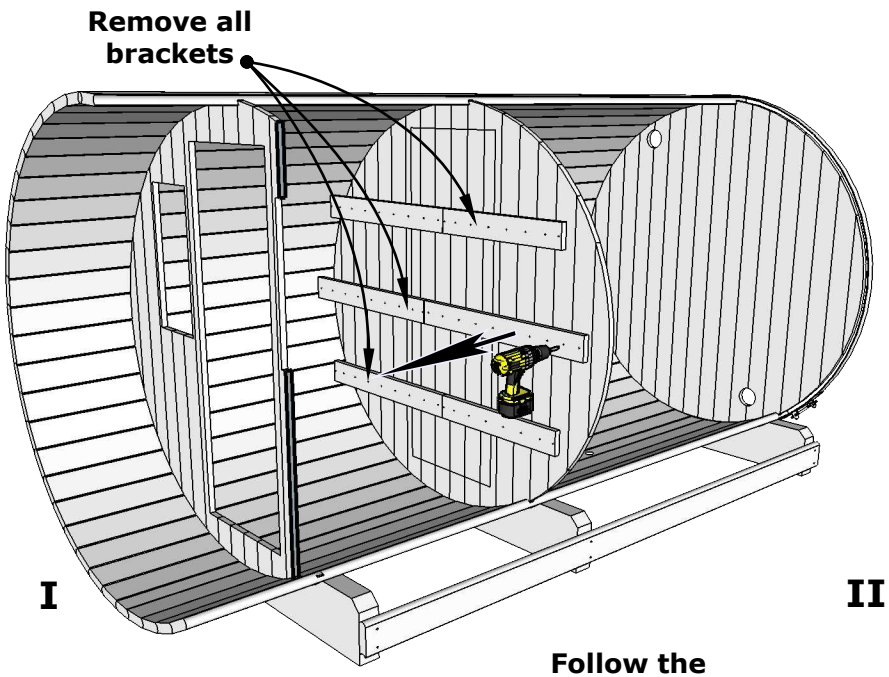

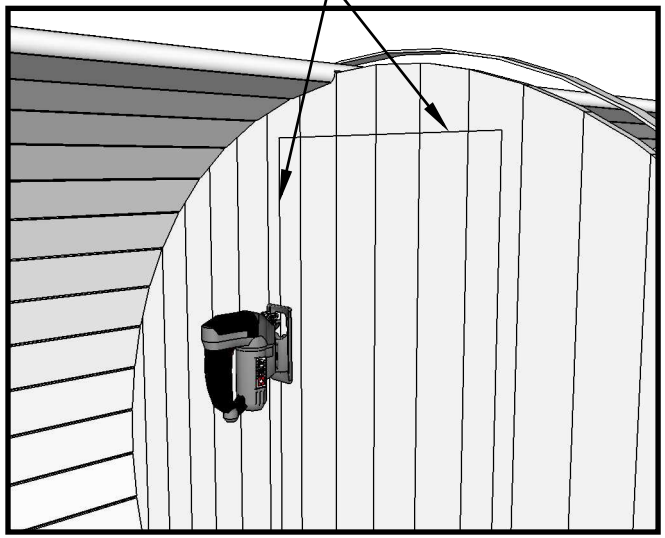

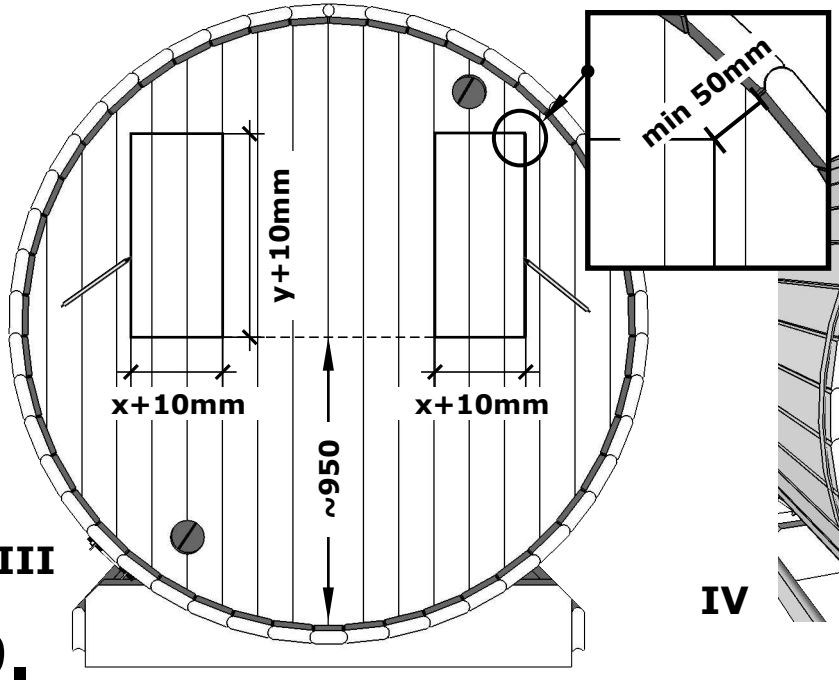

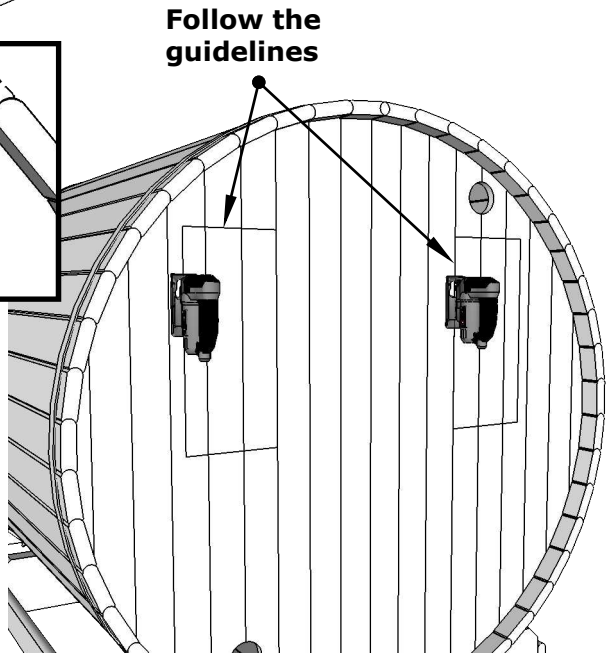

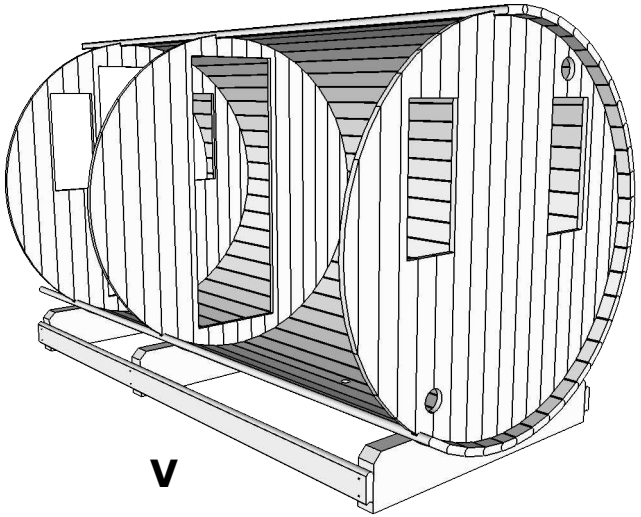

9.

Sauna 400, D 200

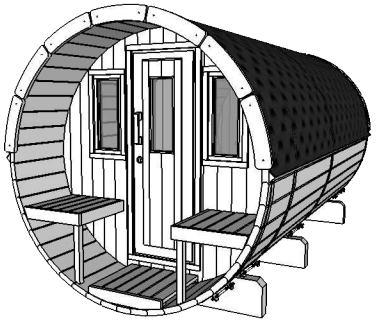

Use waterlevel for doors and windows installation.

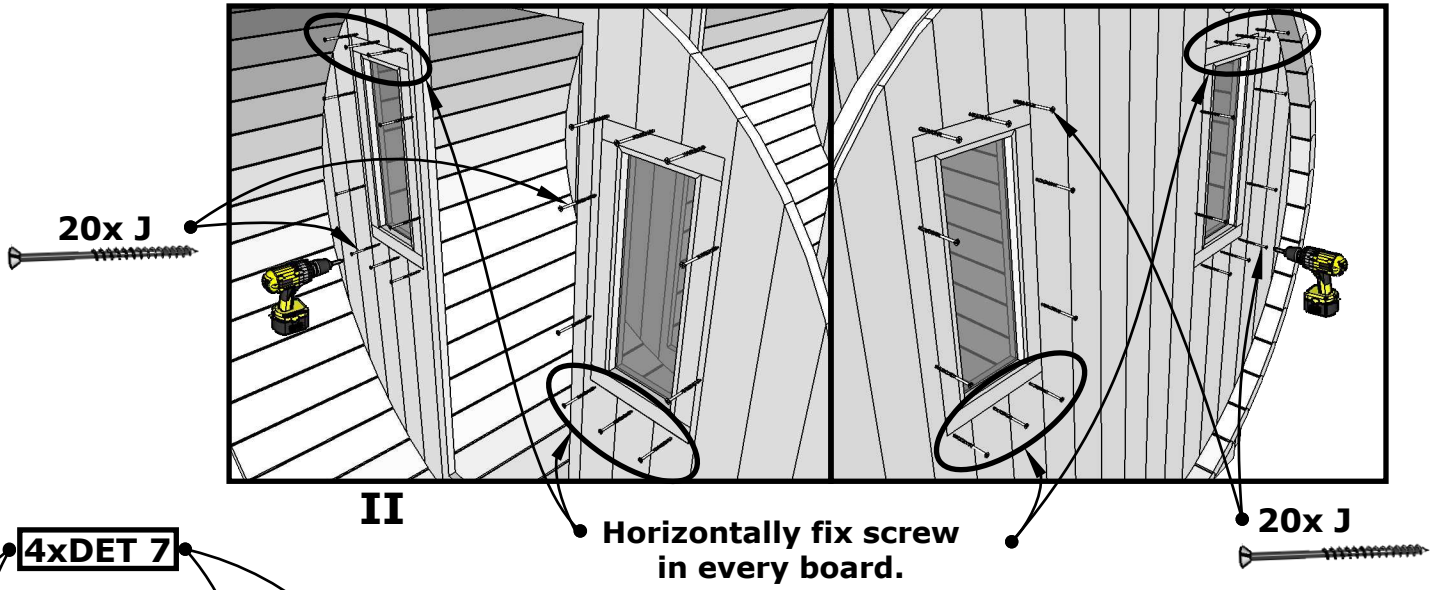

NB! Insert windows and doors from inside.

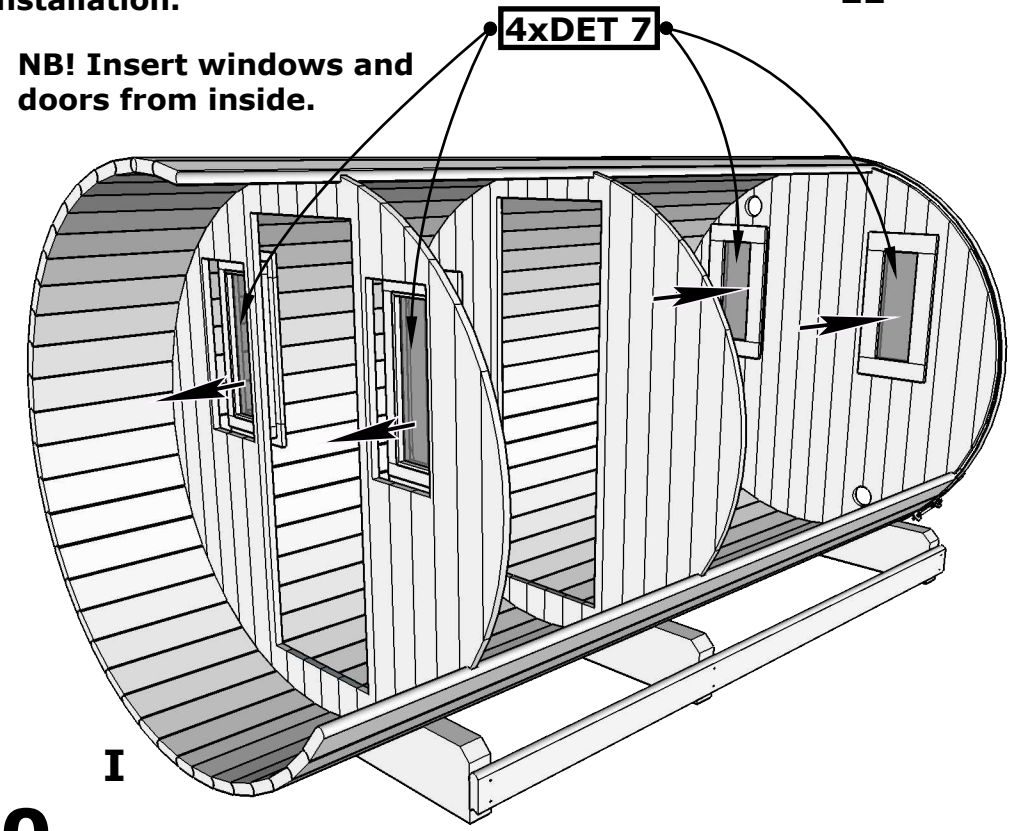

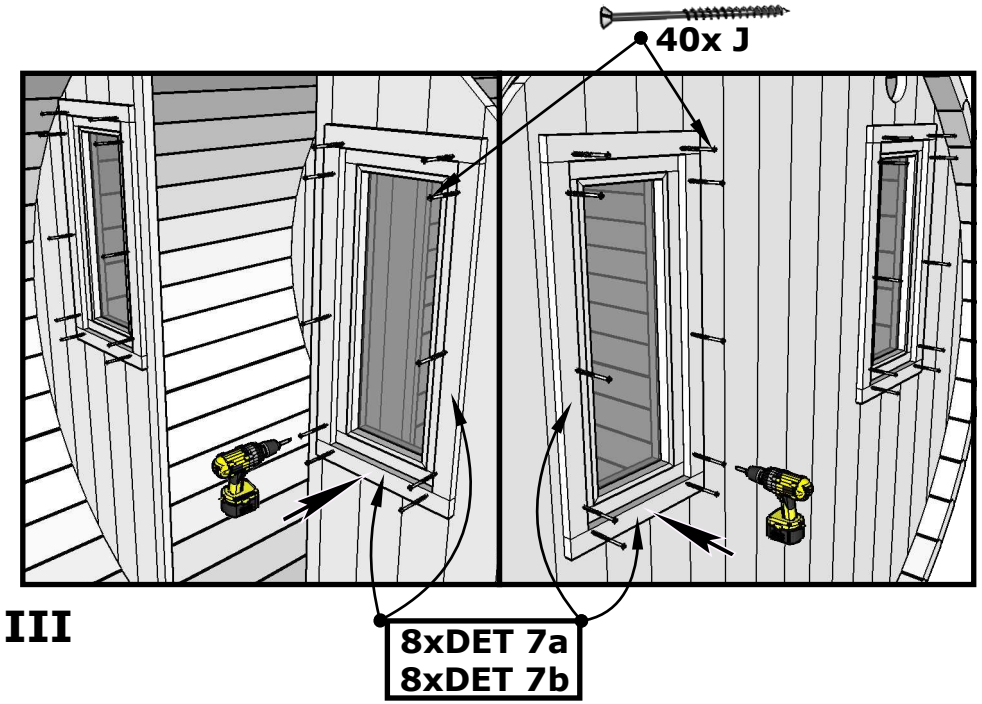

Sauna 400, D 200

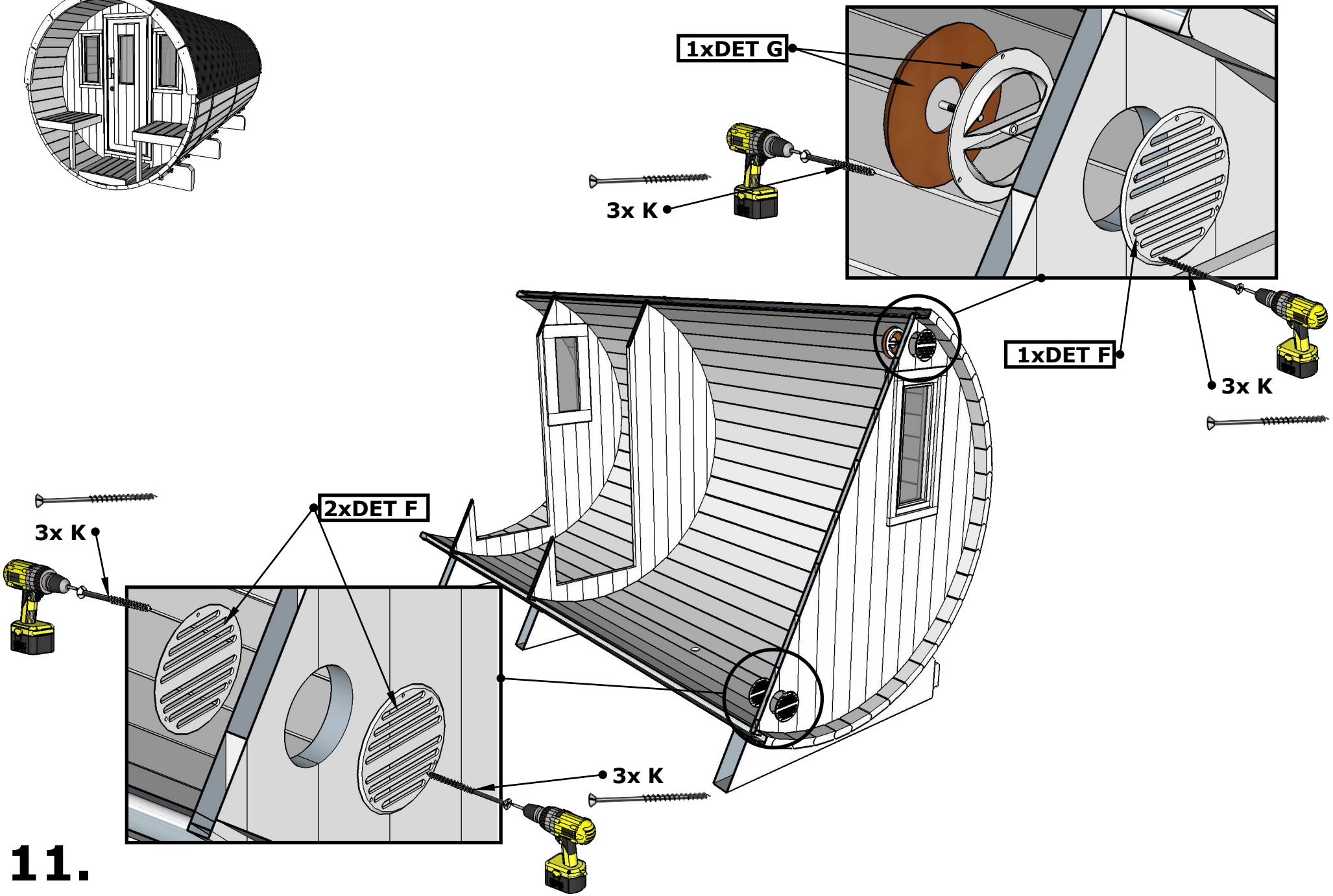

11.

(IN200008)

Sauna 400, D 200

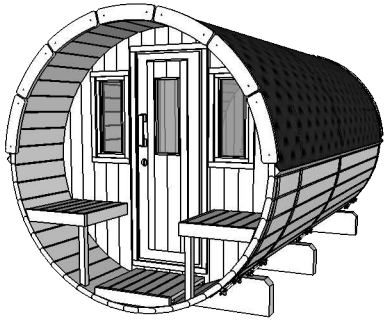

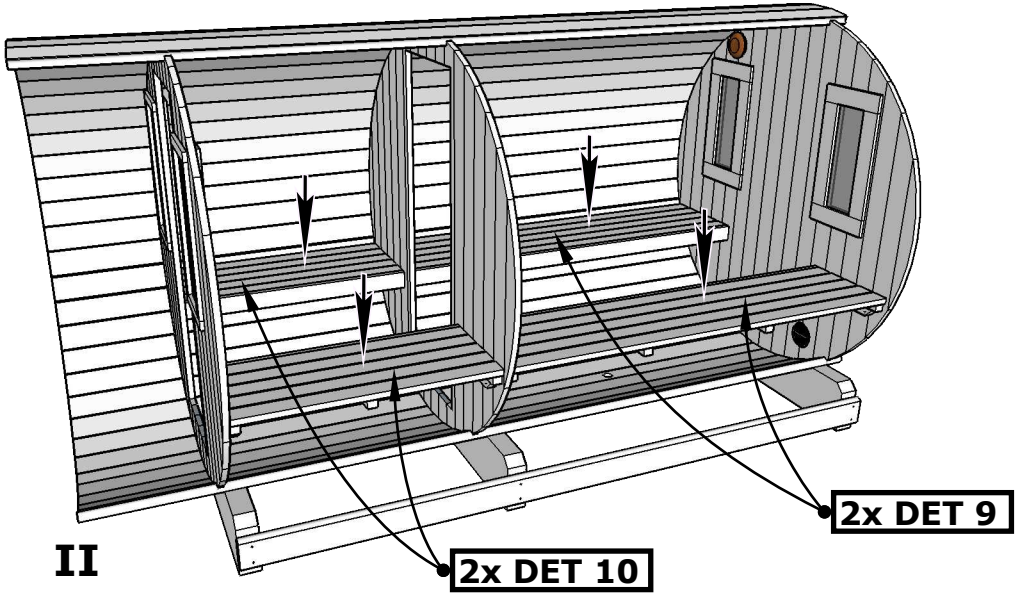

II

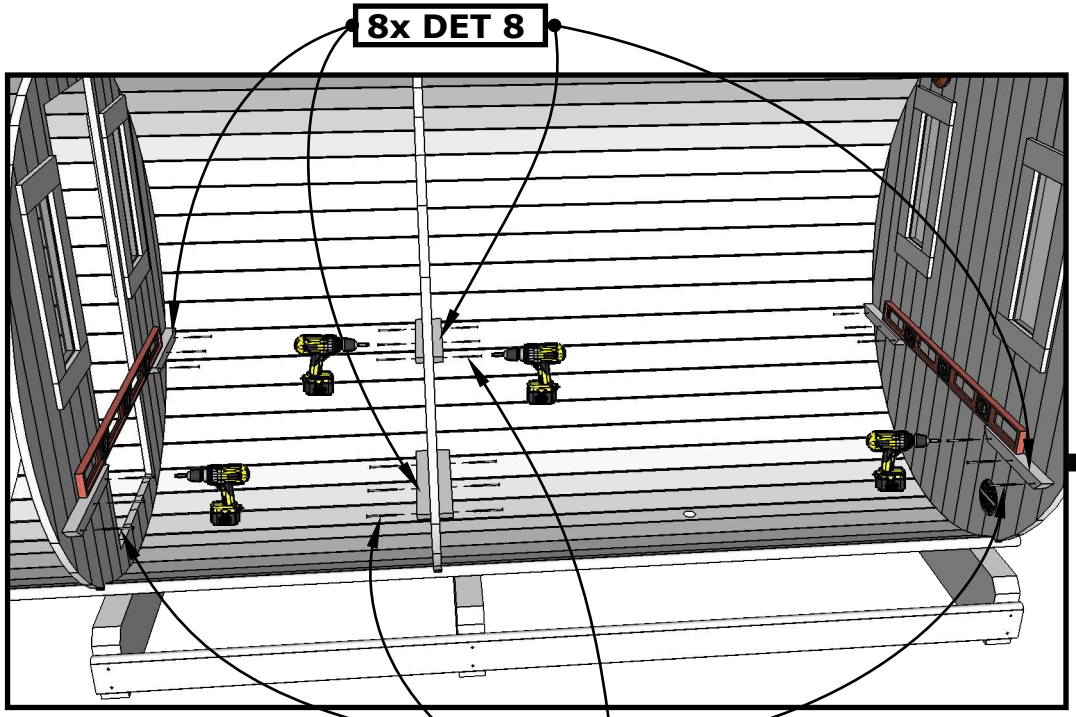

I

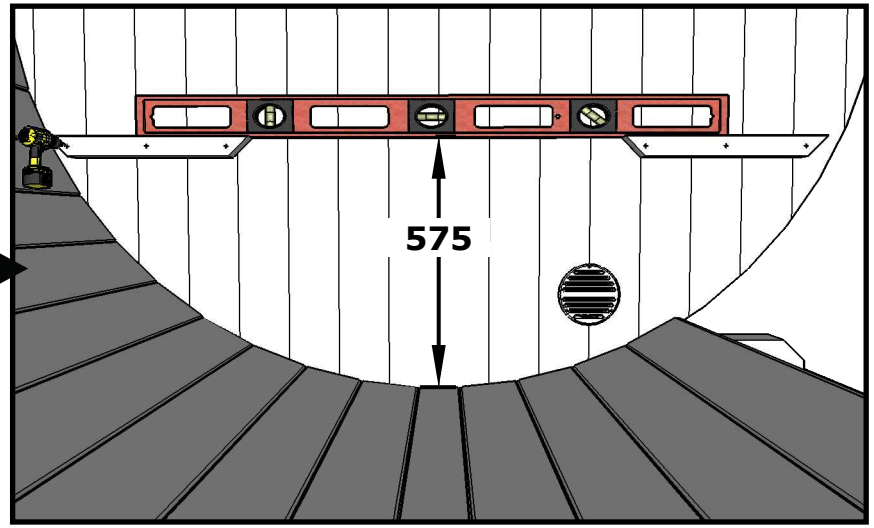

12.

Sauna 400, D 200

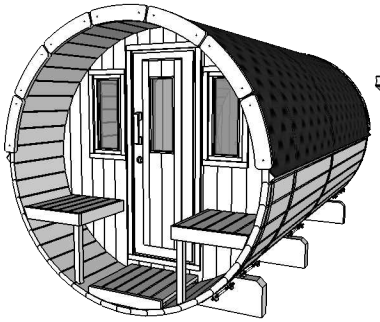

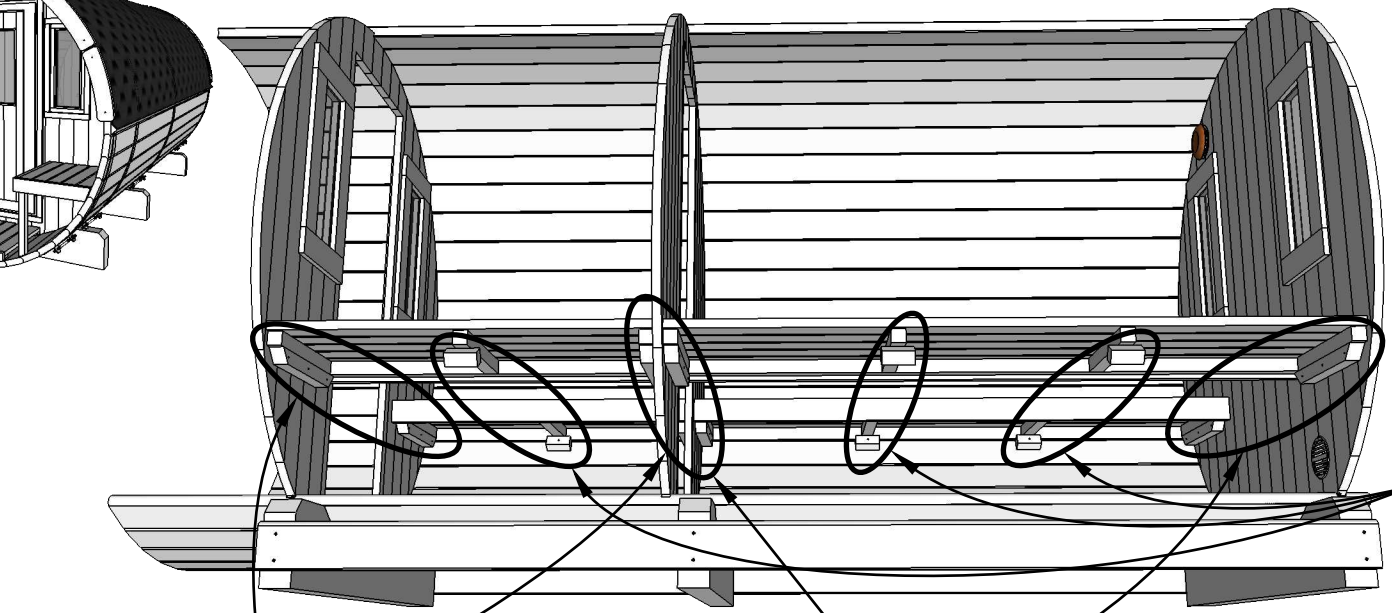

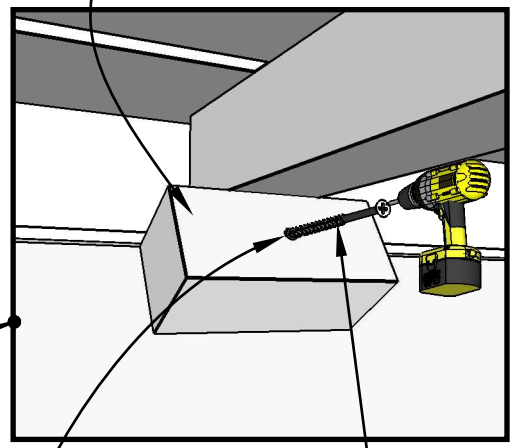

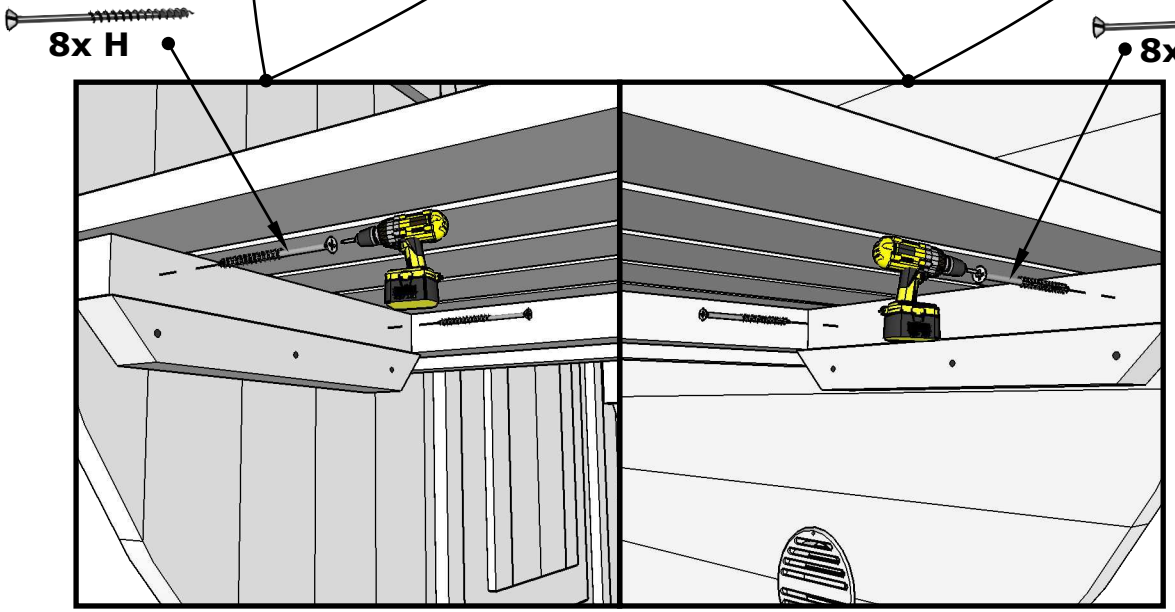

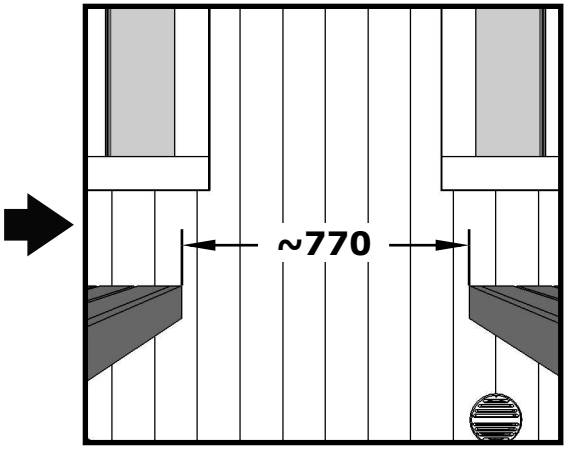

13.

Sauna 400, D 200

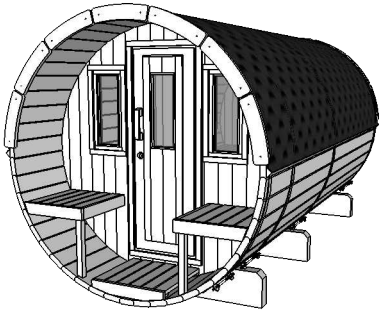

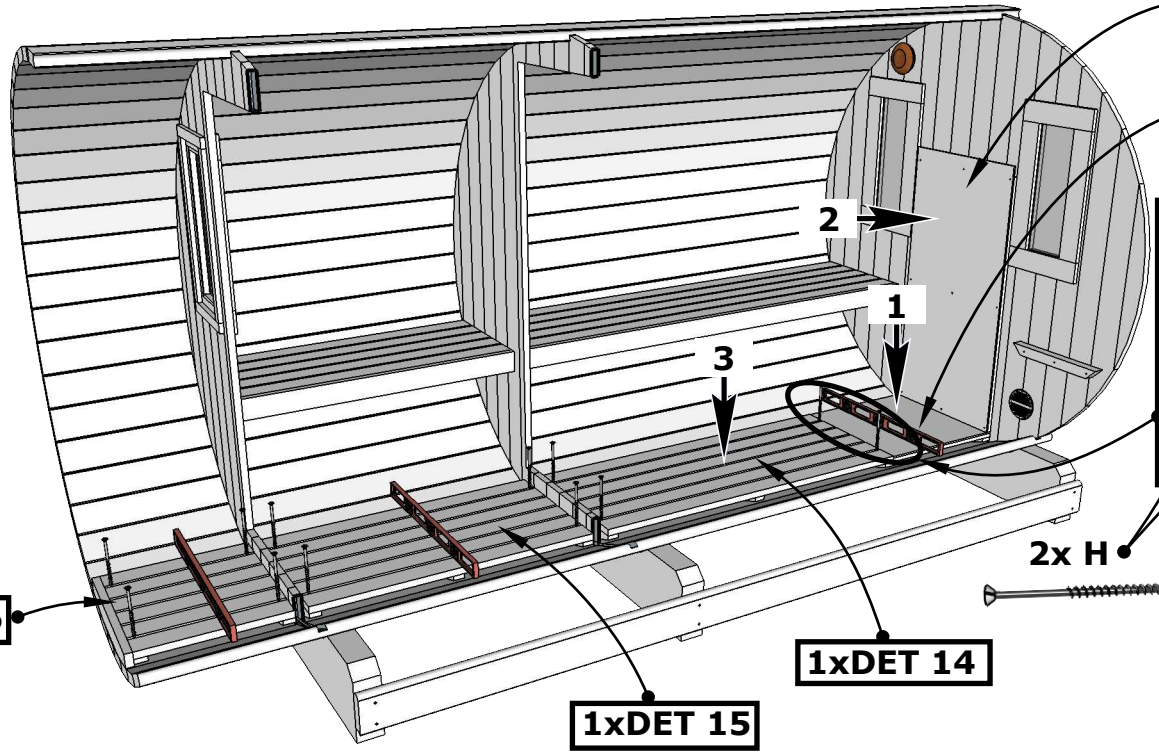

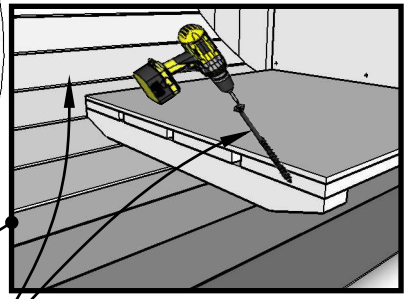

2x H

9x I(K)

3x DET L

NB! If Your sauna equipped with electrical heater, fix DET 13 directly to the wall (without DET L). Then use screw K.

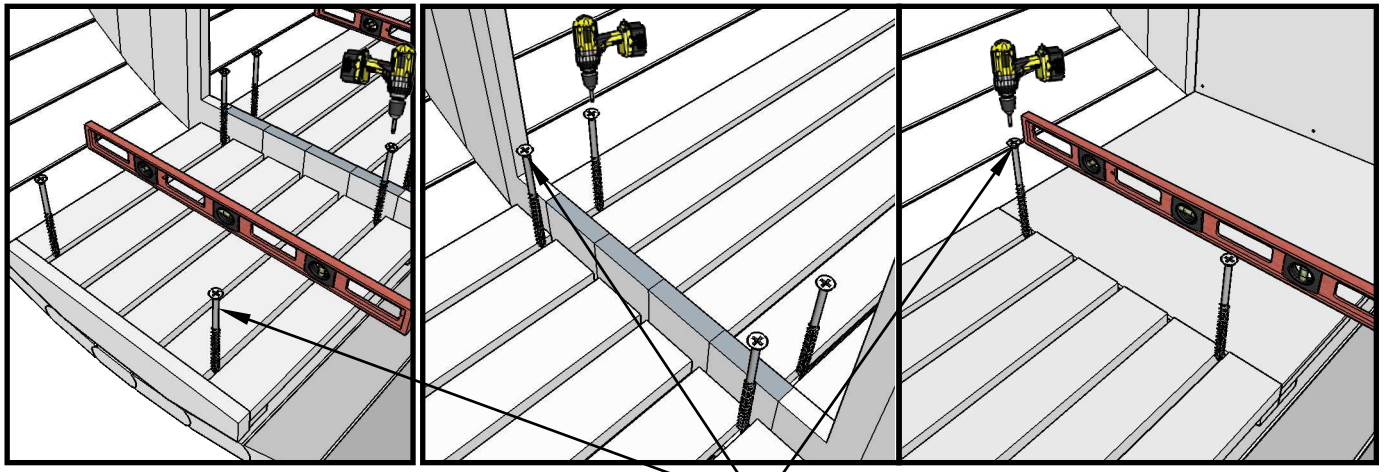

12x M

14.

Sauna 400, D 200

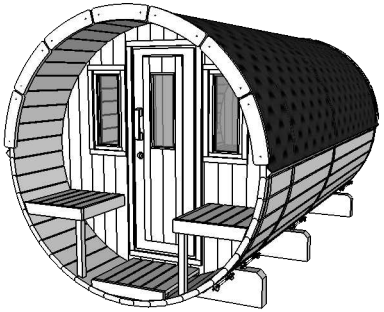

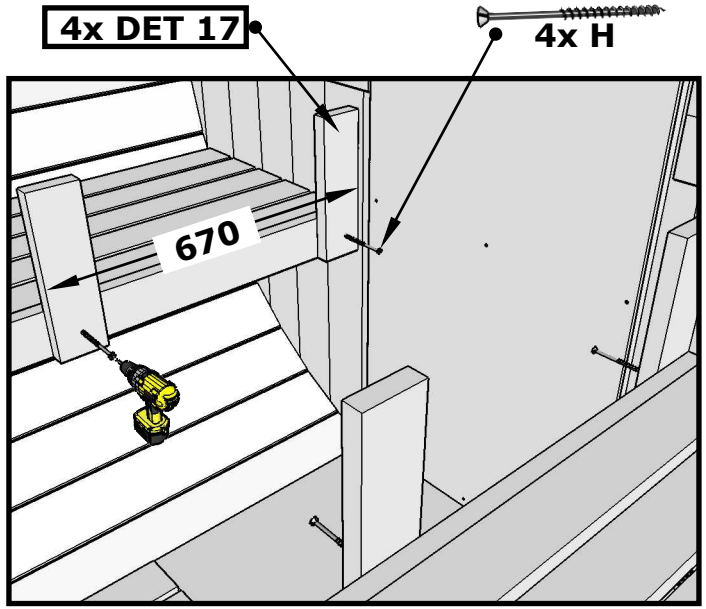

I

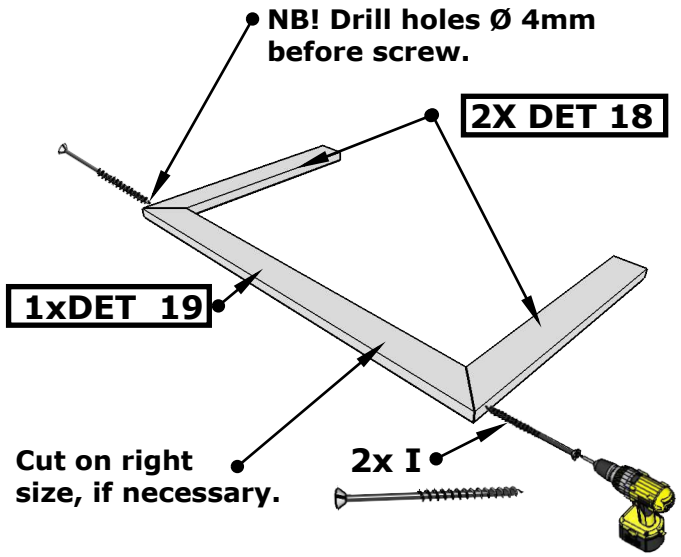

II

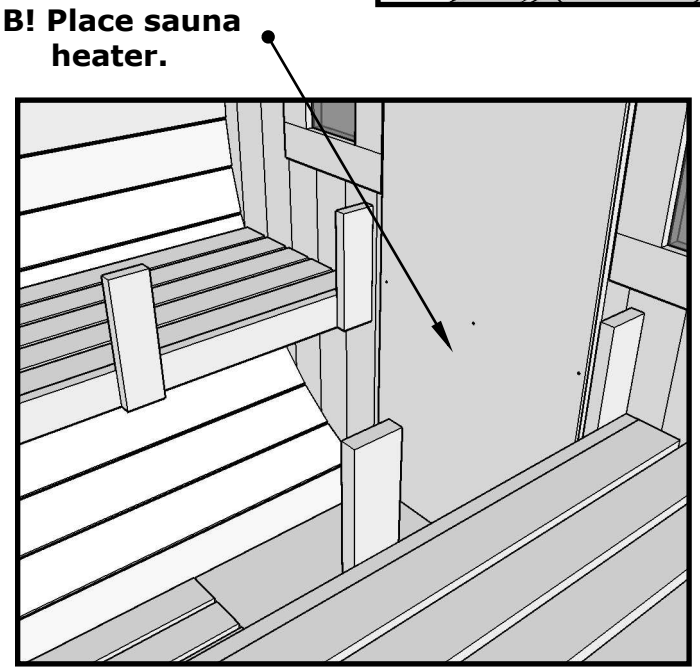

III

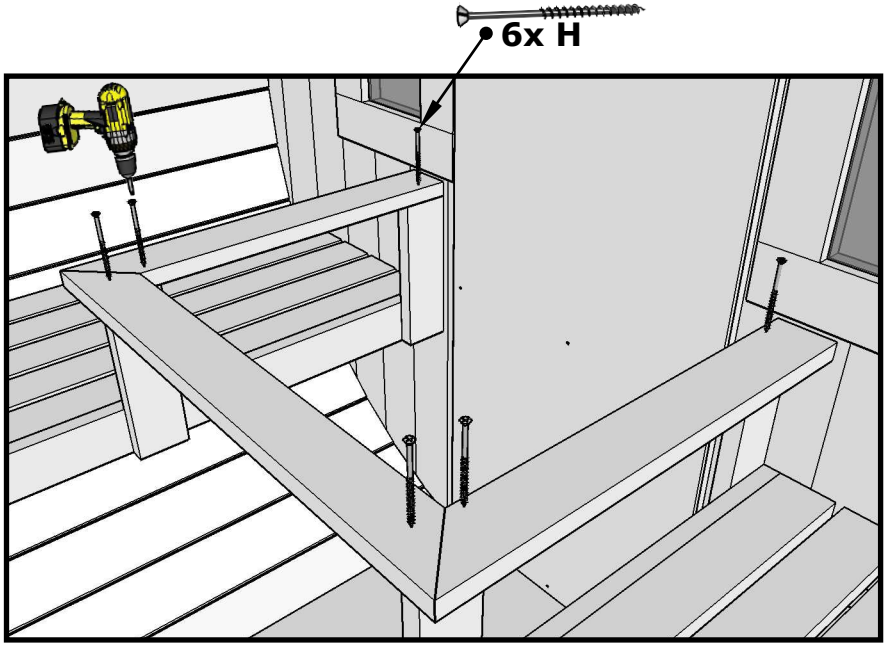

IV

15.

Sauna 400, D 200

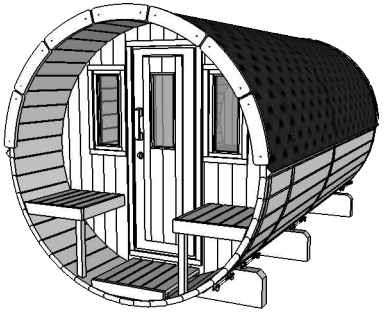

Use waterlevel for doors and windows installation.

NB! Insert windows and doors from inside.

I

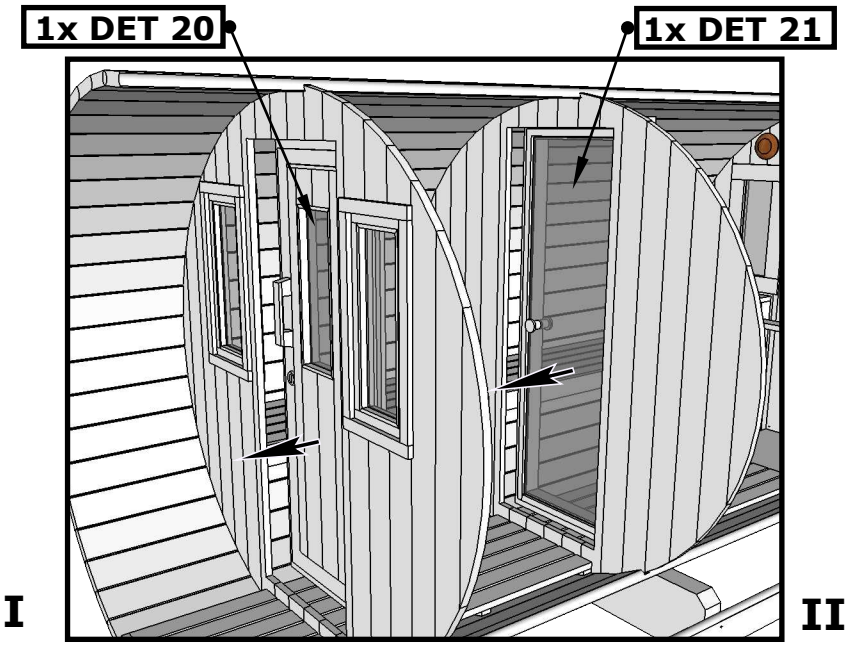

II

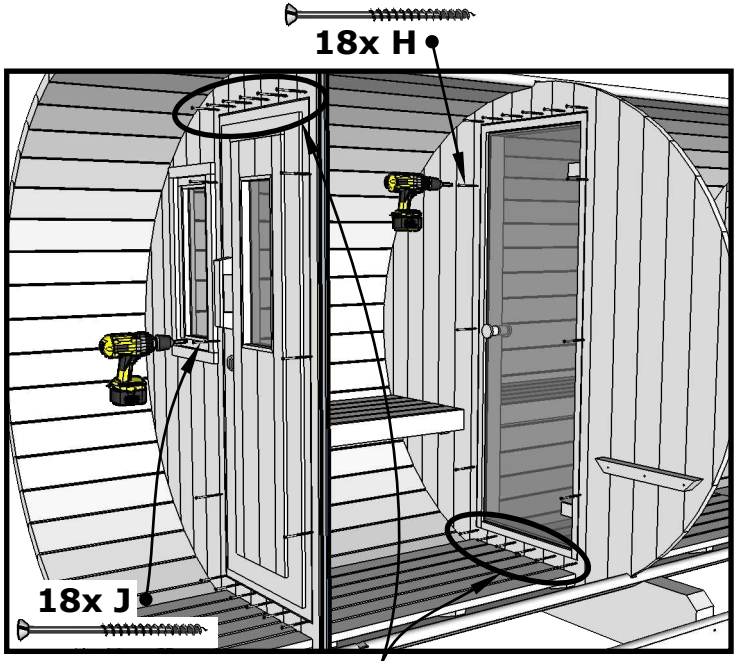

Horizontally fix screws in every board.

III

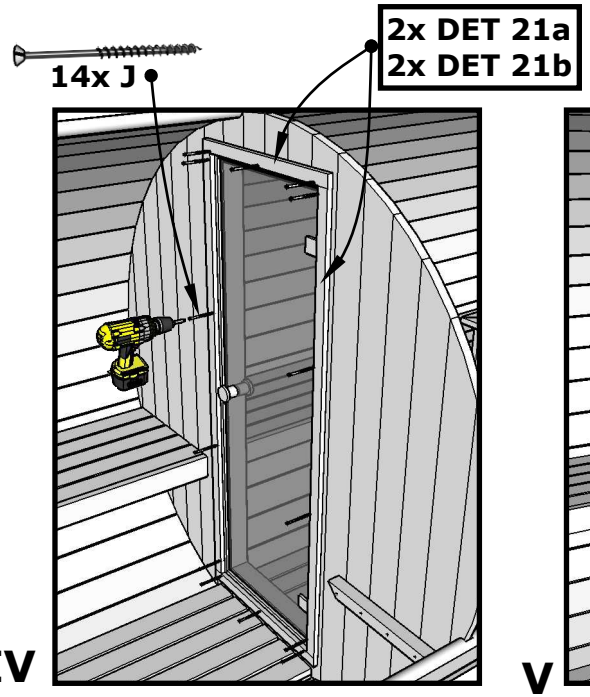

IV

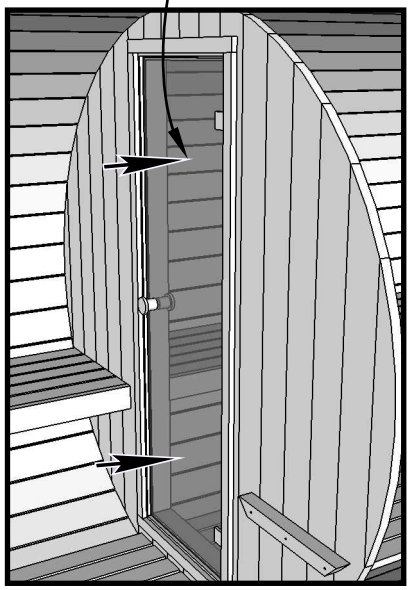

V

VI

16.

Sauna 400, D 200

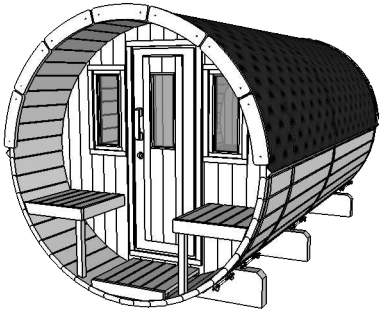

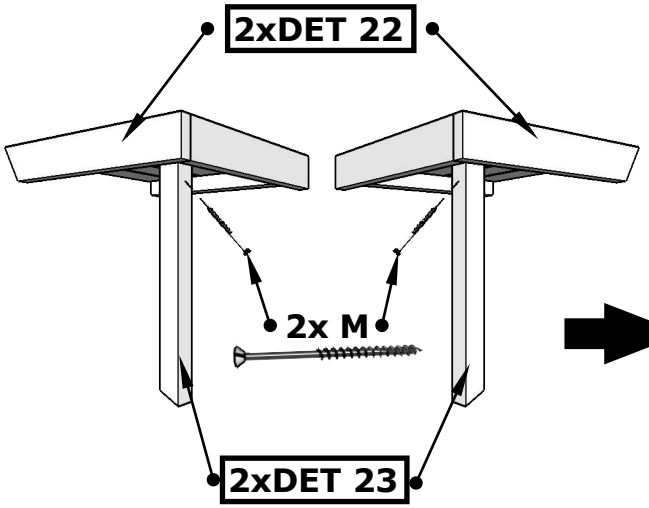

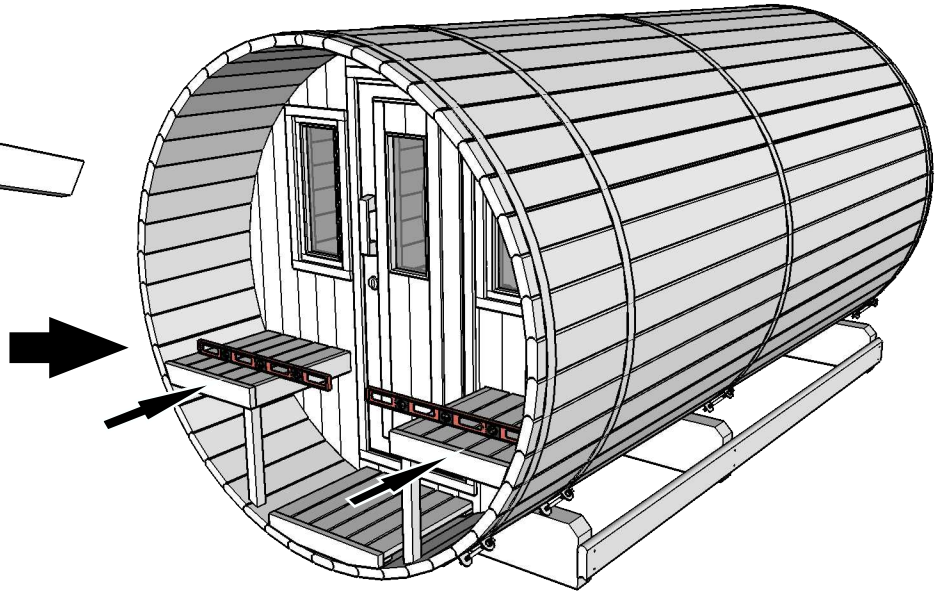

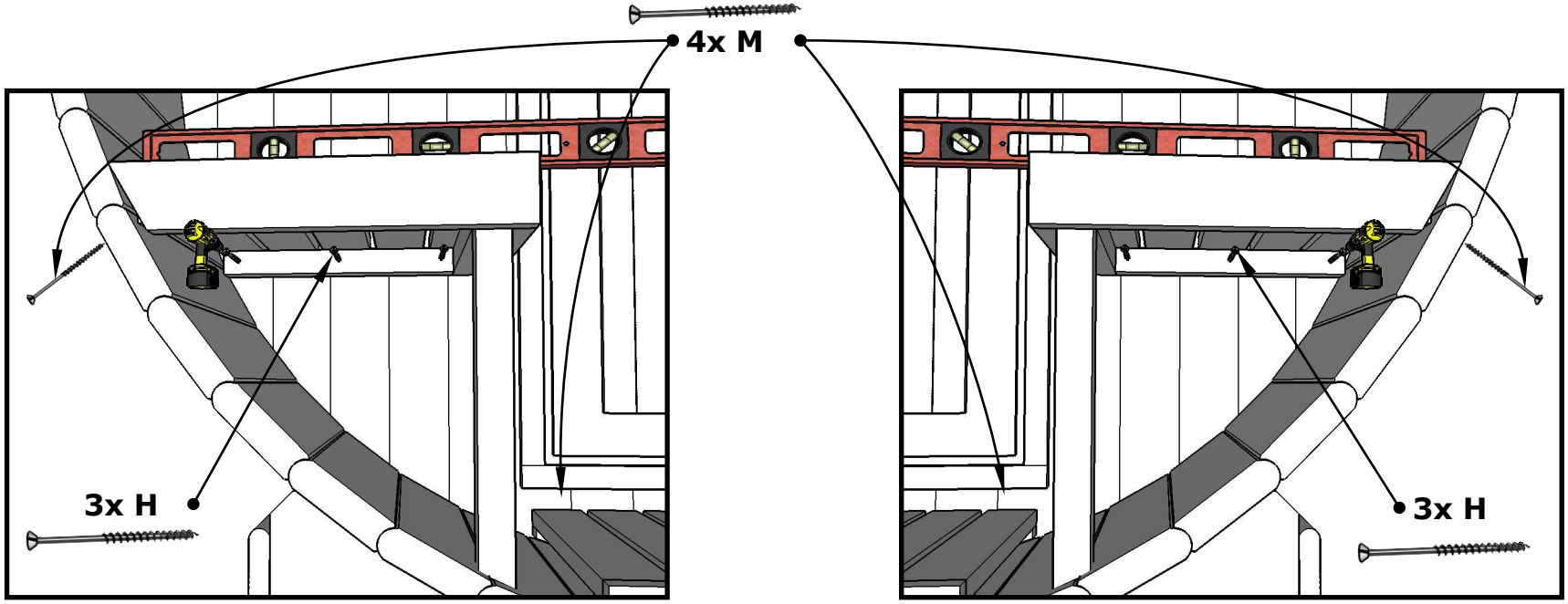

17.

Sauna 400, D 200

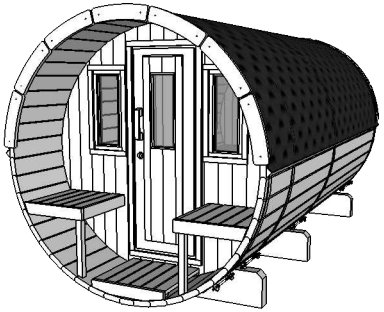

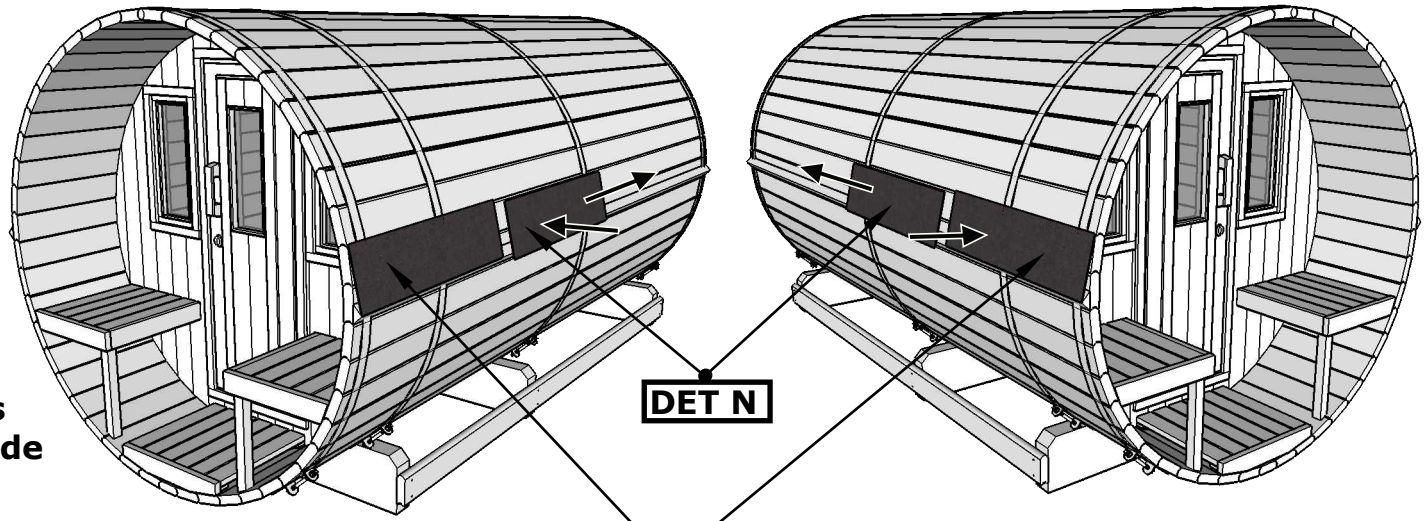

NB! Check also shingles installation manual inside shingles package!

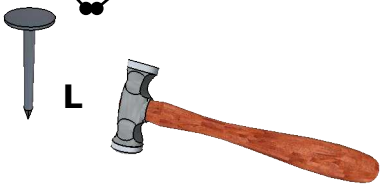

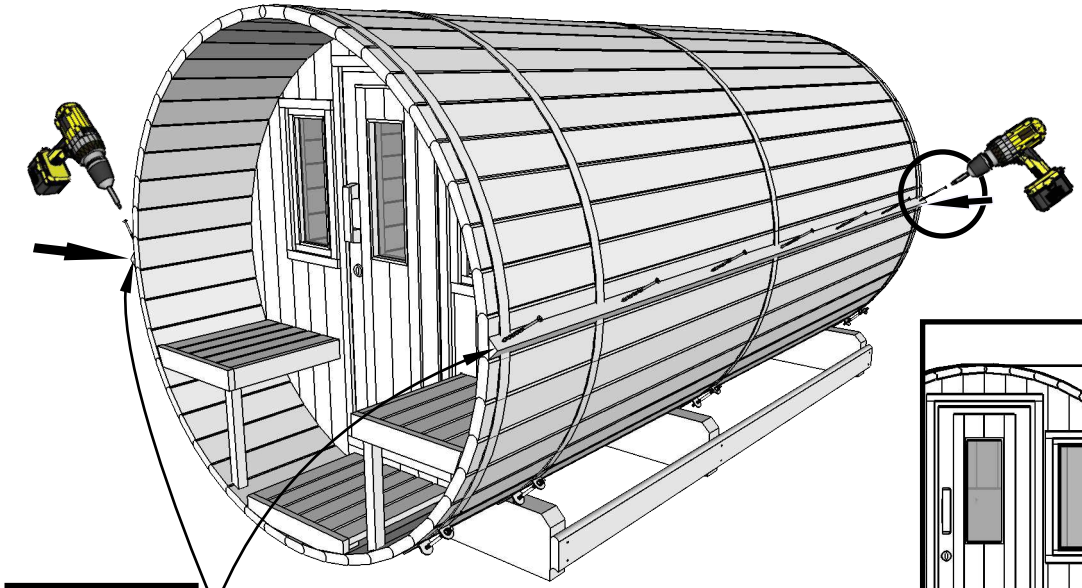

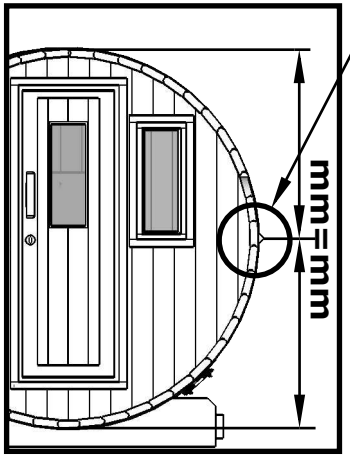

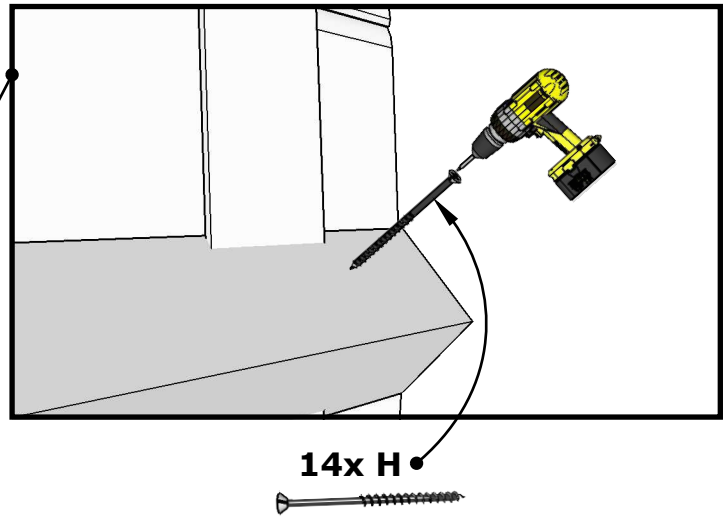

(IN200008)

Sauna 400, D 200

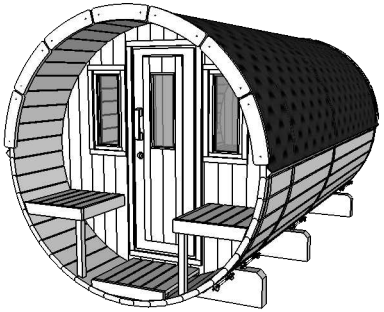

NB! Check also shingles installation manual inside shingles package!

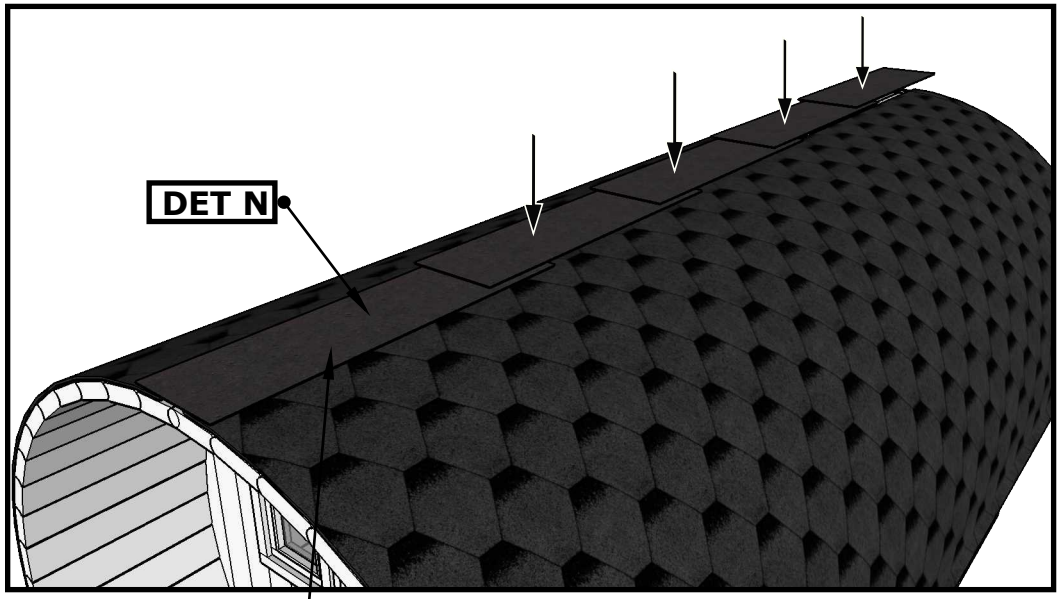

II

L

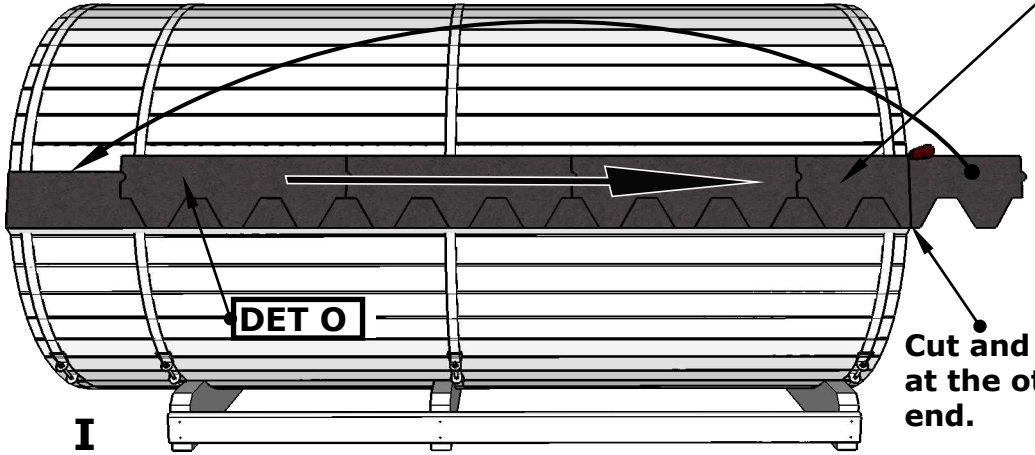

I

Cut and use at the other end.

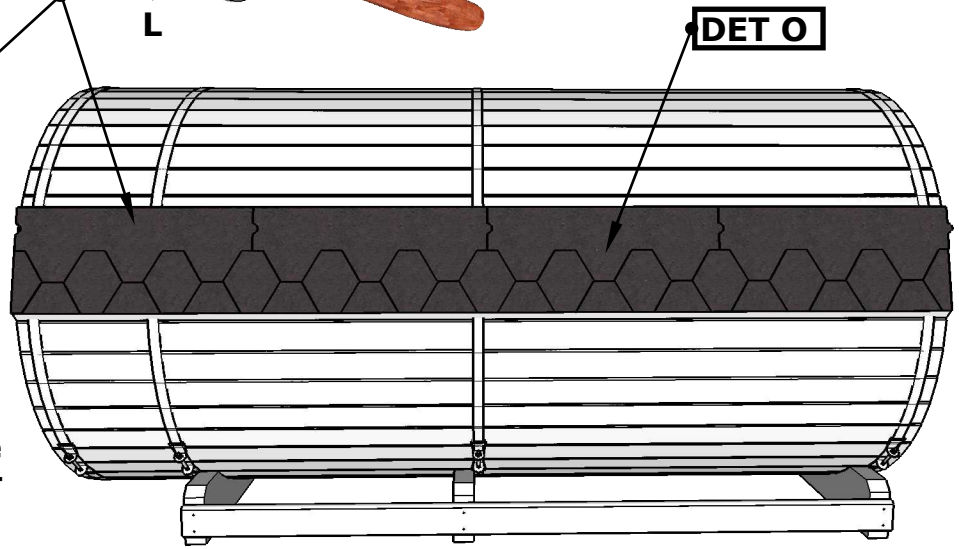

19.

Sauna 400, D 200

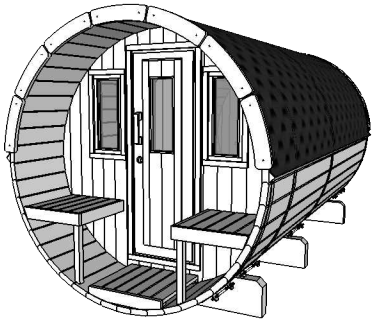

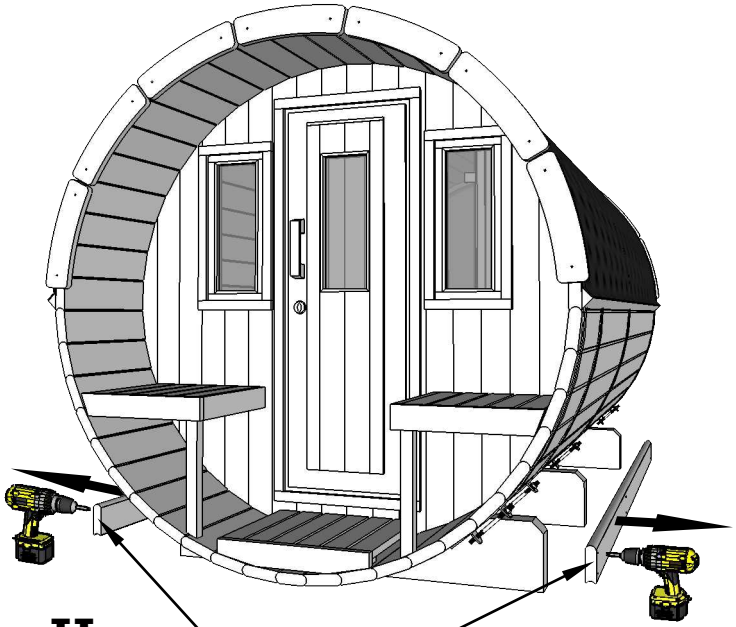

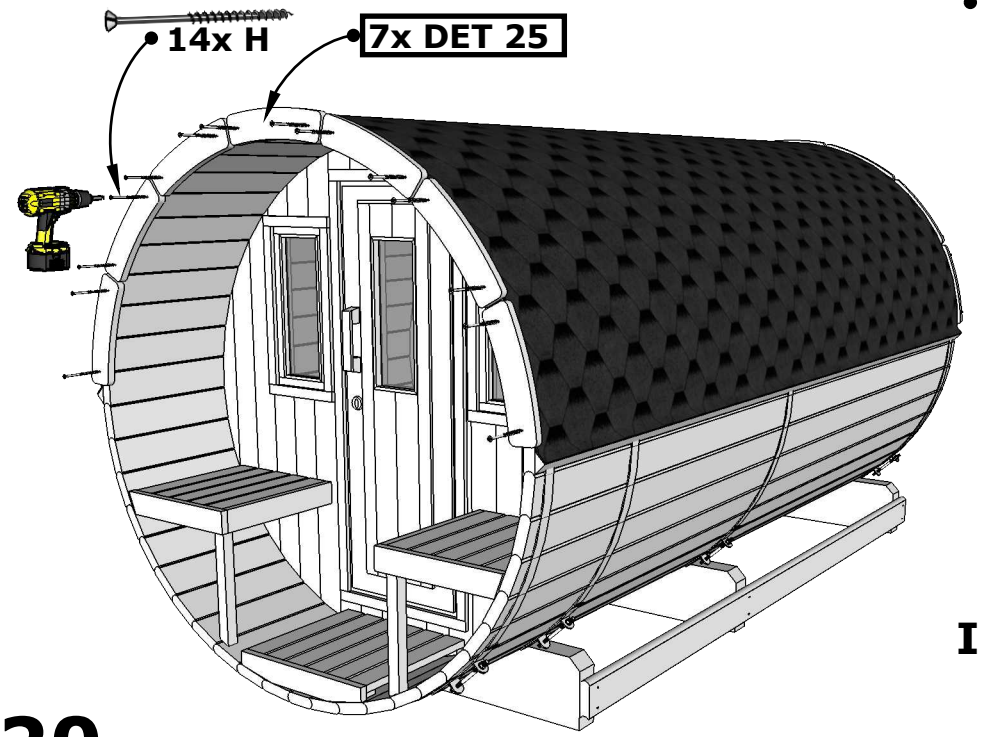

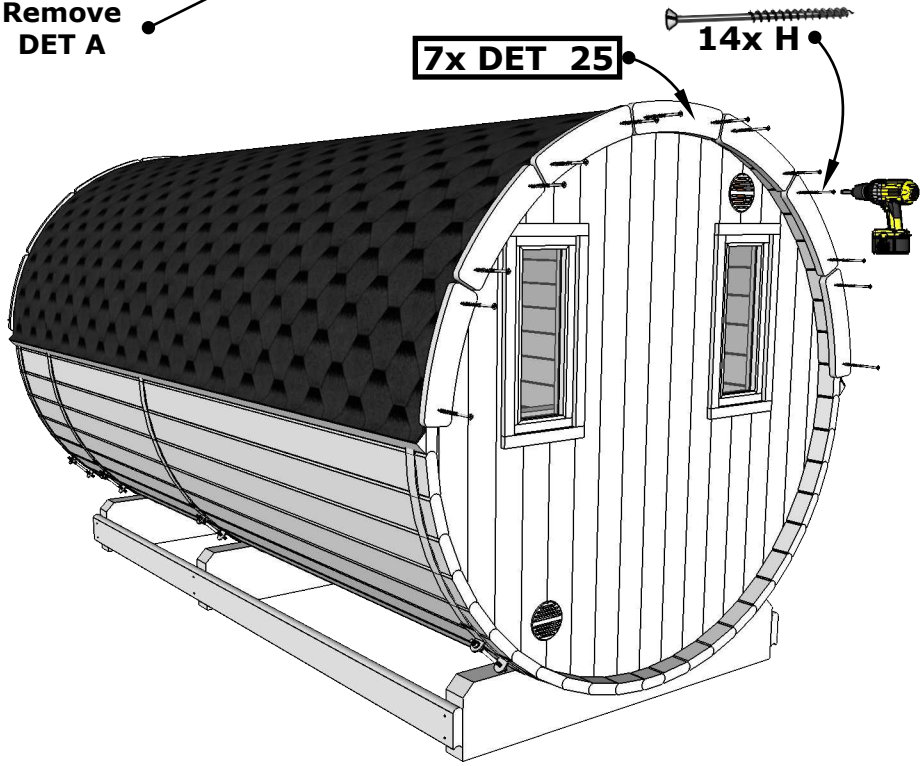

I

20.