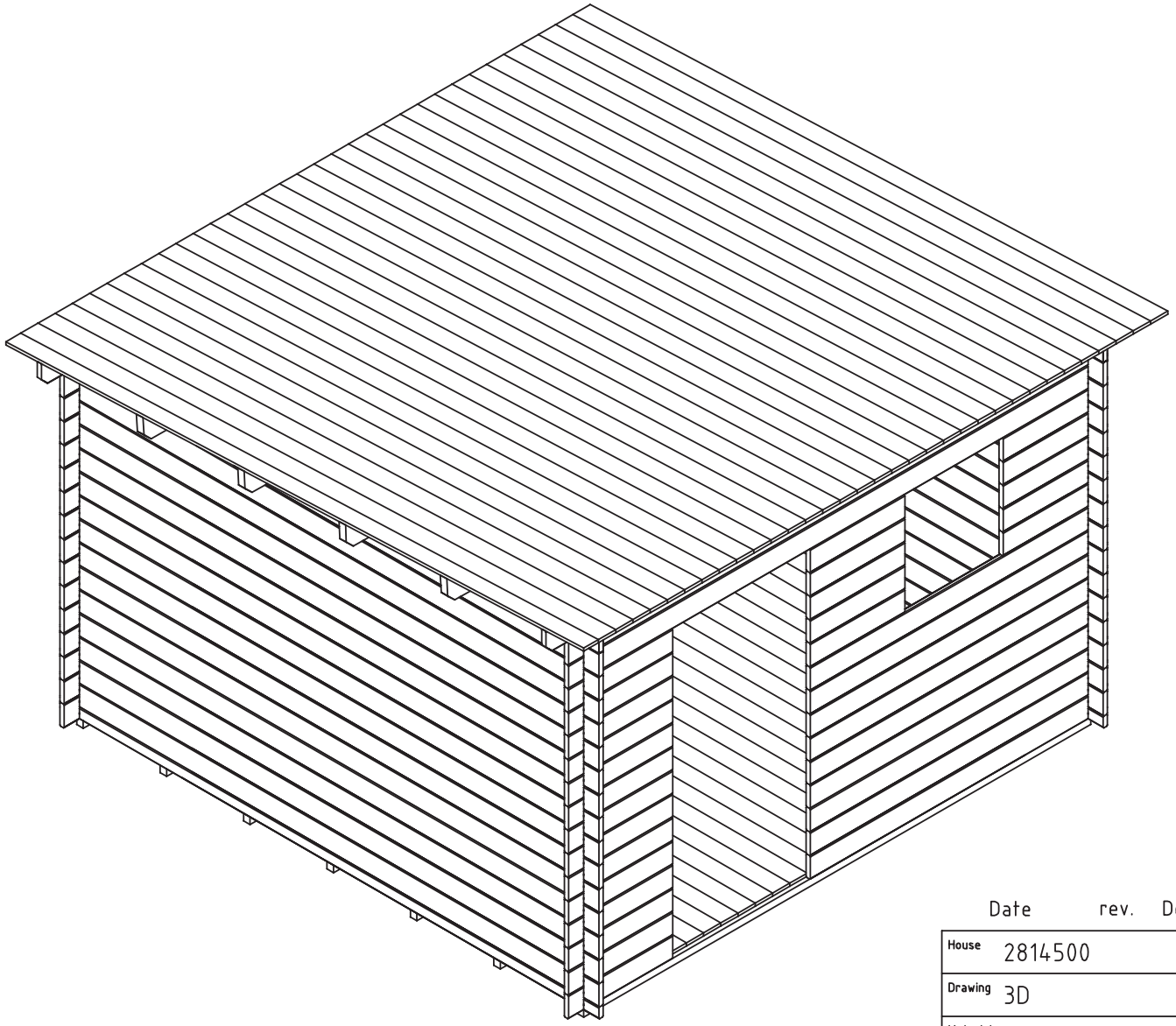

Date	rev.	Description	V 1.0

House	2814500	Sheet	1
Drawing	3D	Scale	
Material	28x135	Date	11.08.2022
Drawer	K.K.	File	2814500 3D.dwg

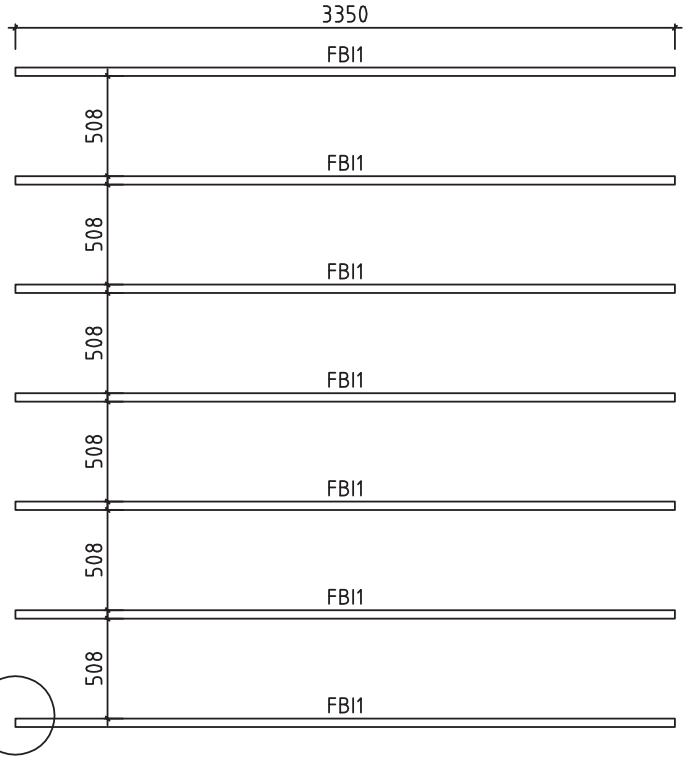

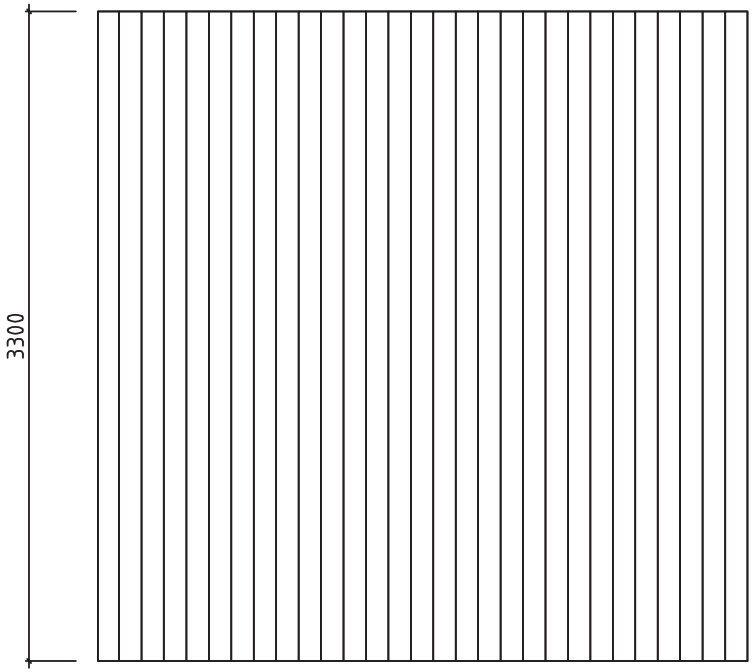

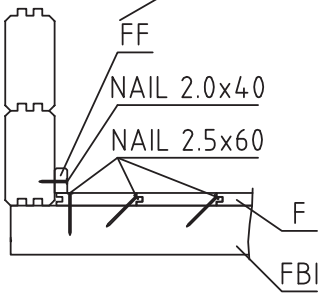

House	2814500	Sheet	2
Drawing	FLOORBEAMS	Scale	1:35
Material	43x43	Date	11.08.2022
Drawer	K.K.	File	2814500.dwg

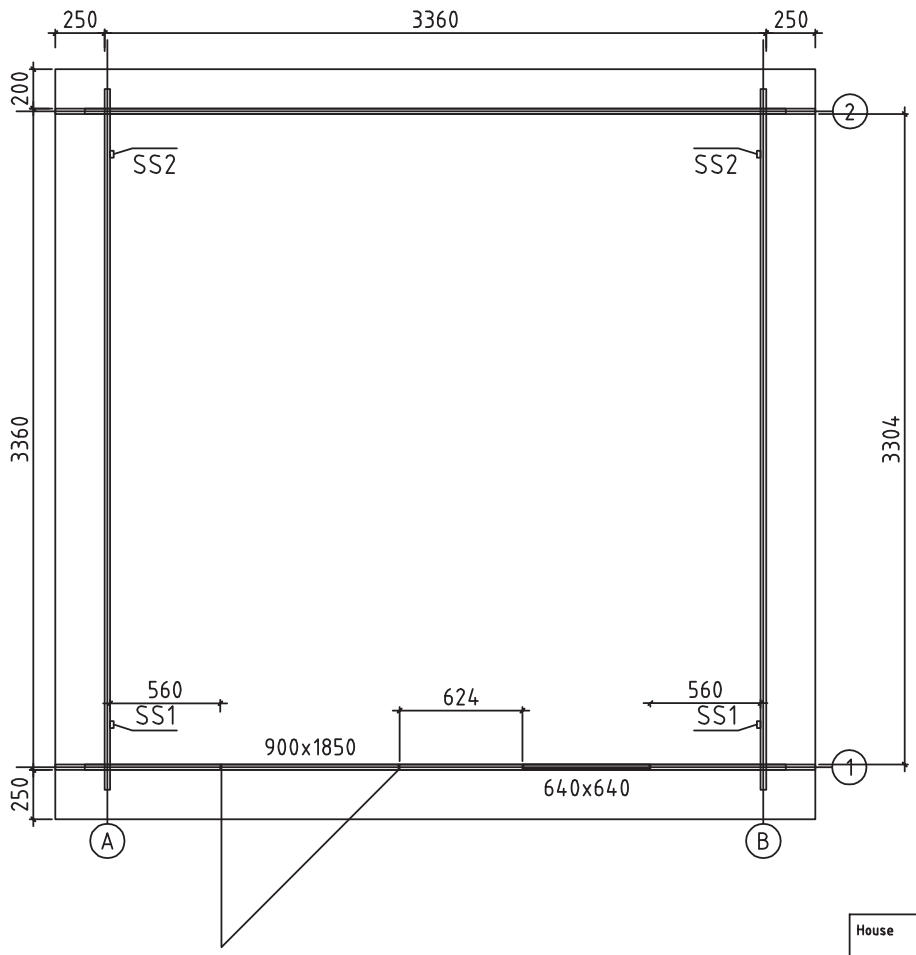

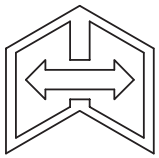

House	2814500	Sheet	3
Drawing	Plan	Scale	1:35
Material	28x135	Date	11.08.2022
Drawer	K.K.	File	2814500.dwg

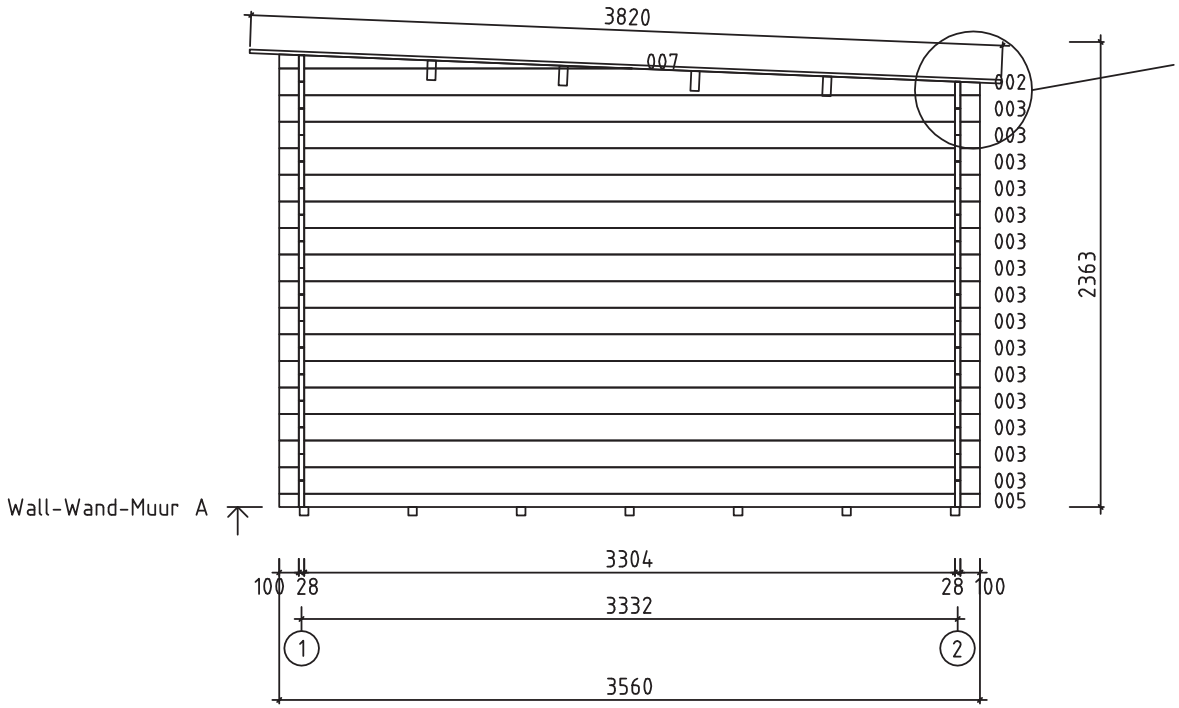

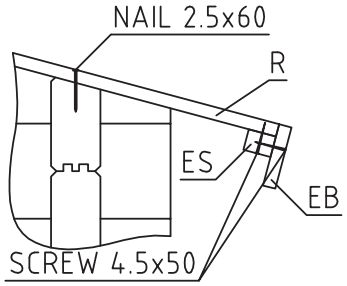

House	2814500	Sheet	4
Drawing	WALL-WAND-MUUR A	Scale	1:35
Material	2.8x13.5	Date	11.08.2022
Drawer	K.K.	File	2814500.dwg

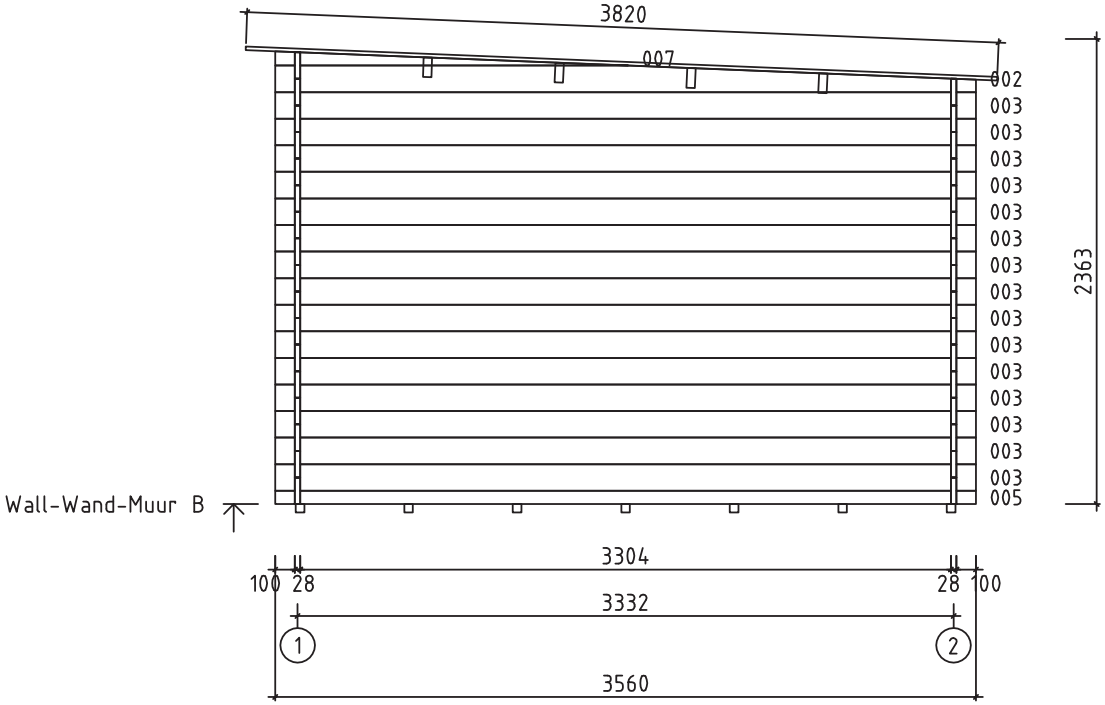

House	2814500	Sheet	5
Drawing	WALL-WAND-MUUR B	Scale	1:35
Material	2.8x13.5	Date	11.08.2022
Drawer	K.K.	File	2814500.dwg

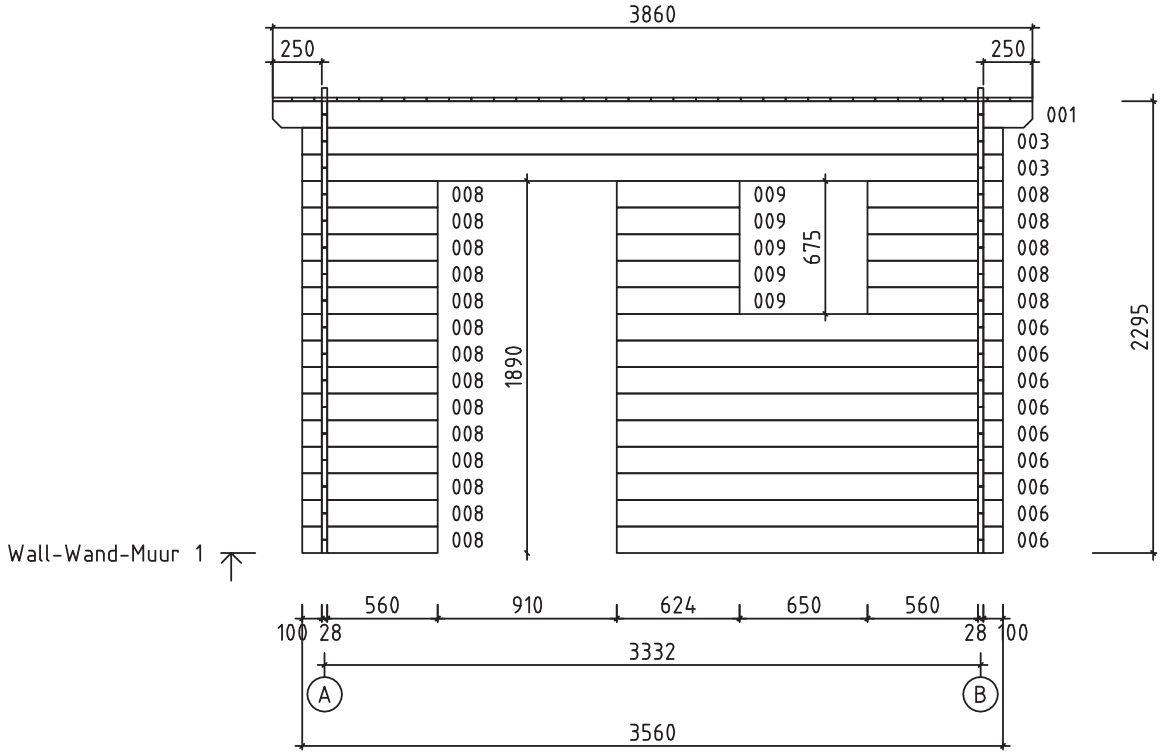

House	2814500	Sheet	6
Drawing	WALL-WAND-MUUR 1	Scale	1:35
Material	2.8x13.5	Date	11.08.2022
Drawer	K.K.	File	2814500.dwg

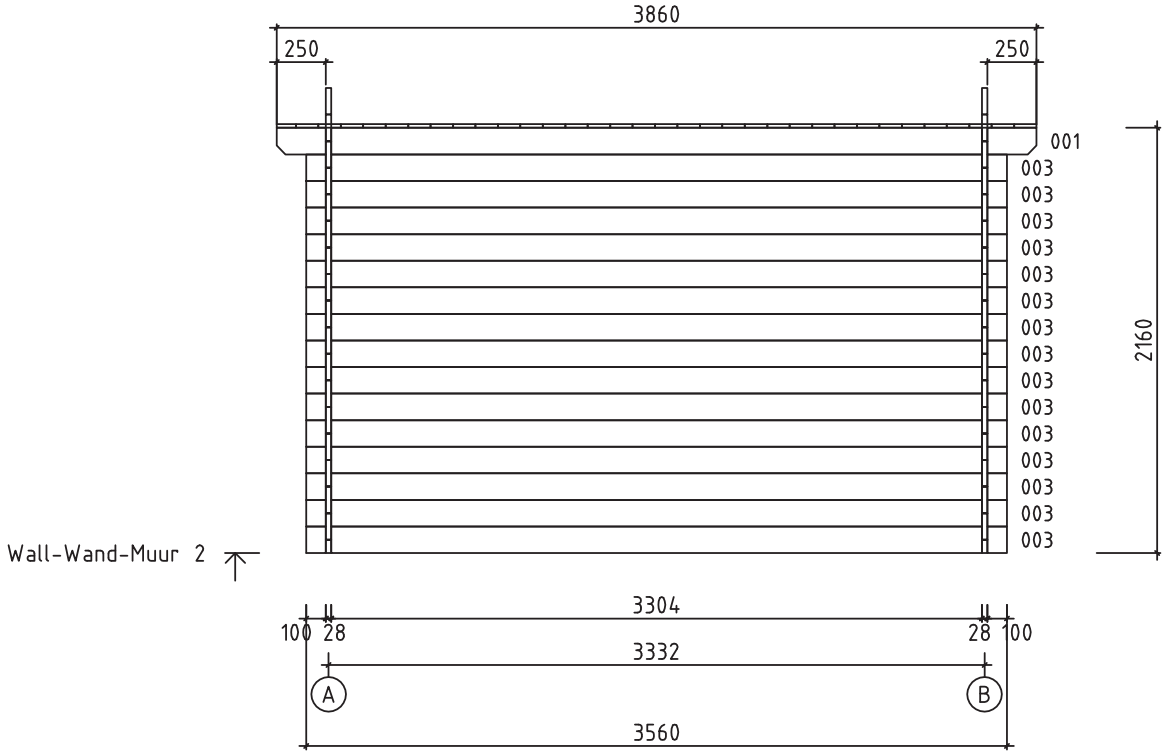

House	2814500	Sheet	7
Drawing	WALL-WAND-MUUR 2	Scale	1:35
Material	2.8x13.5	Date	11.08.2022
Drawer	K.K.	File	2814500.dwg

Pos	Specification-Bestimmung-Omschrijving	Pcs	Profile (mm)	L (mm)
001	250 3304 250 PM	2	28x135	3860
003	100 3304 100	45	28x135	3560
004	100 3432 SPARE BEAM-ERZATZBOHLE-VOORRAADPLANK	1	28x135	3560
005	100 3304 100	2	28x68	3560
006	1834 100	9	28x135	1962
008	560 100	19	28x135	688
009		5	28x135	624
WA-1	343 007 002 003 3560	1	28x343	3560
WB-1	343 007 002 003 3560	1	28x343	3560
HB	HIT BLOCK-SCHLAGHÖLZER-BLAZENPLANK	2	28x135	300
FBI1	FLOORBEAMS-FUSSBODENBALKEN-POUTRES DE FONDATION IMPRÉGNÉS IMM	7	43x43	3350
RB1	ROOFBEAMS-DACHBALKEN-DAKBALK 250 3304 250	4	43x140	3860
F1	FLOORBOARD-FUSSBODENBRETT-PLANCHER or-oder-ou	38+1 29+1	18x88 18x114	3300
R1	ROOFBOARD-DACHBRETT-DAKPLANK or-oder-of	45+1 34+1	18x88 18x114	3820
FF1	FLOOR FILLET-FUSSBODENLEISTE-BAGUETTE DE FINITION DE PLANCHER		18x35	13.5
GB1	GABLE BOARD-GIEBELBLENDE-GEVELPLANK	2	18x120	3900
GS1	ROOF FELT FILLET-GIEBELLEISTE-GEVELLIJST	2	18x70	3900
GS2	ROOF FELT FILLET-GIEBELLEISTE-GEVELLIJST	1	18x70	3860
EB1	EAVE BOARD-TRAUFBRETT-AFDEKPLANK	2	18x120	3860
ES1	EAVE SLAT-TRAUFENLEISTE-AFDEKLIJST	2	30x40	3860
SS1	STORM SLAT-STURMLEISTE-STORMLIJST	2	35x18	2220
SS2	STORM SLAT-STURMLEISTE-STORMLIJST	2	35x18	2070
	SCREWS-SCHRAUBEN-SCHROEF FOR-FÜR-VOOR SS1, SS2	12	ø6.0	45
	WASHER-SCHEIBE-SCHIJF FOR-FÜR-VOOR SS1, SS2	12	ø6.0	18
	NAIL-NAGEL-CLOUS FOR-FÜR-POUR FF1	45	ø2.0	40

Kood 2814500	Materjal	File 2814500.dwg	Leht 8

Pos	Specification-Bestimmung-Omschrijving	Pcs	Profile (mm)	L (mm)
	NAIL-NAGEL-NAGEL FOR-FÜR-VOOR F1, R1	540	⌀2.5	60
	SCREWS-SCHRAUBEN-SCHROEF FOR-FÜR-VOOR GB1, GS1, EB1, ES1	96	⌀4.5	50
	SCREWS-SCHRAUBEN-VIS 2x005 FOR-FÜR-POUR	12	⌀4.5	90
	SCREWS-SCHRAUBEN-SCHROEF FOR-FÜR-VOOR RB1	8	⌀6.0	160
	DOOR-TÜR-DEUR (left-links-links) AST_PL V	1	900	1850
		1		
		1		
		1		
	WINDOW-FENSTER-VENSTER 1 pcs-st (left-links-links)			
	Ast_KP V	1	640	640
		1		
		1		
		2		

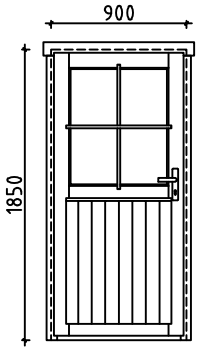

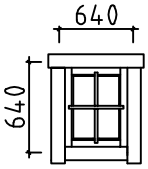

Kood	2814500	Materjal	File	2814500.dwg	Leht	9