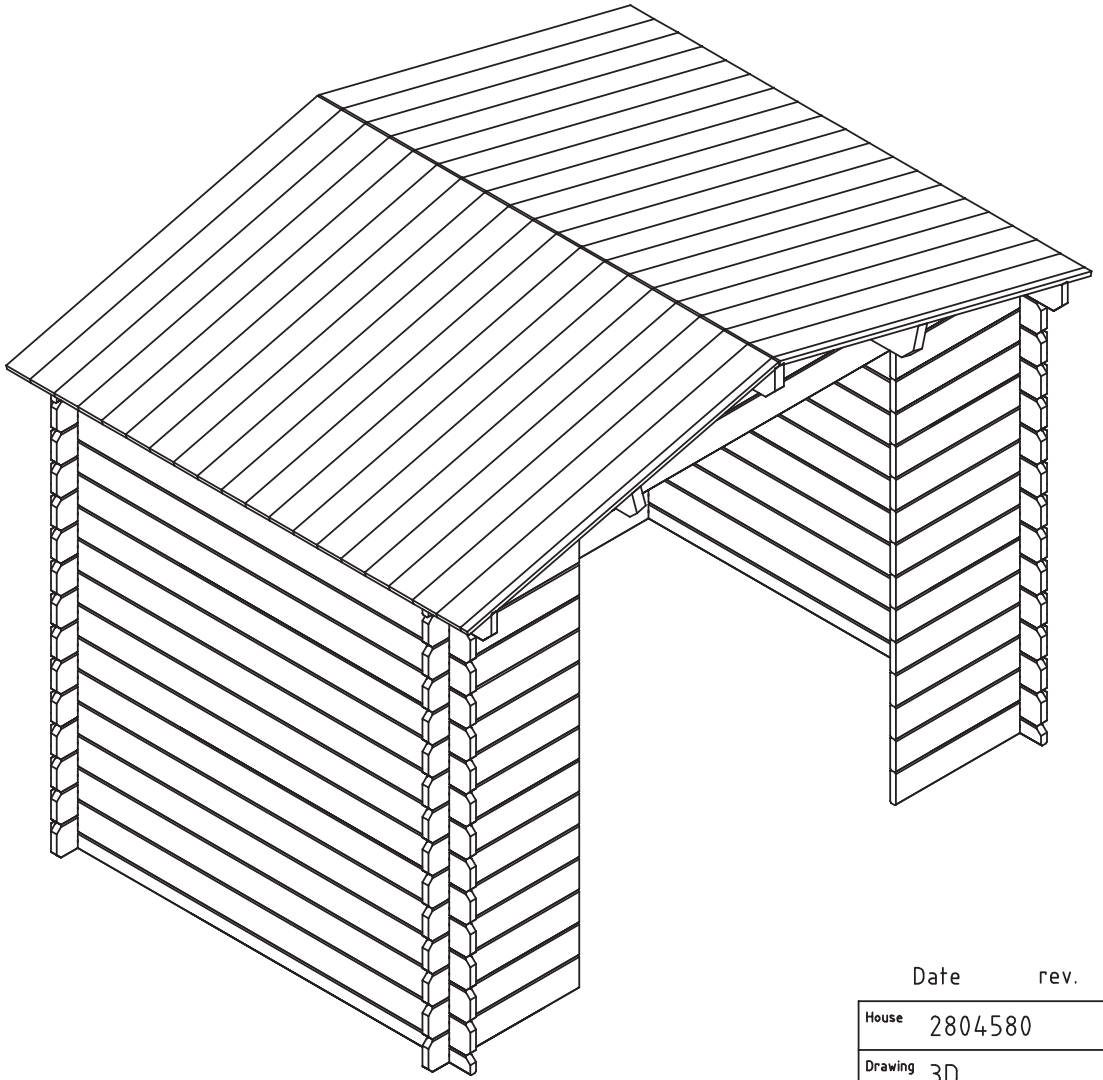

Date rev. Description V 1.0

House	2804580	Sheet	1
Drawing	3D	Scale	
Material	28x135	Date	17.04.2025
Drawer	K.K.	File	2804580 3D.dwg

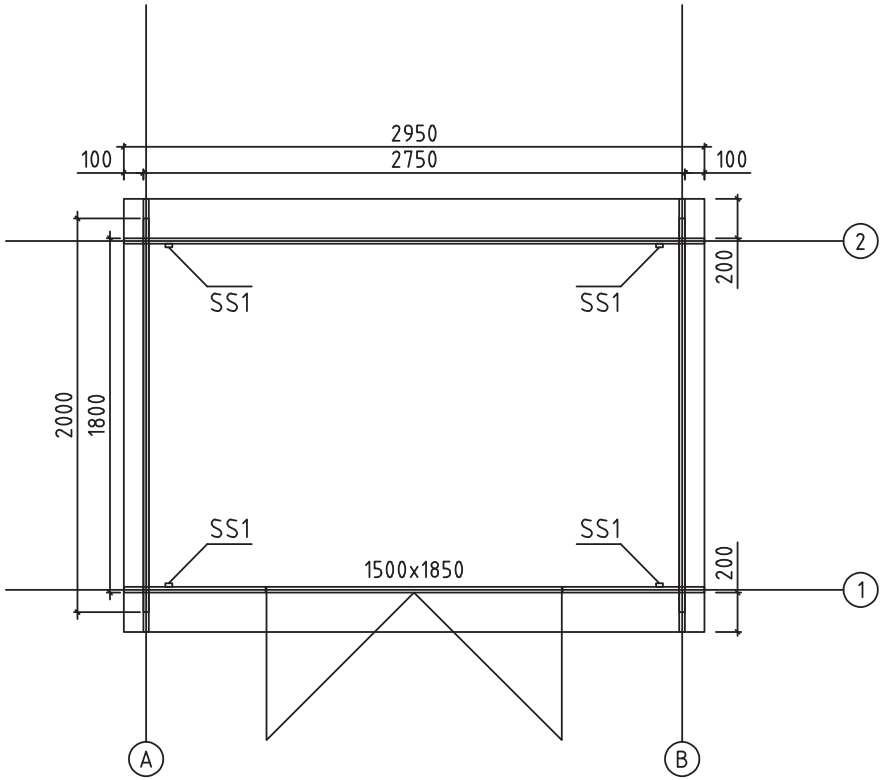

House	2804580	Sheet	2
Drawing	Plan	Scale	1:35
Material	28x135	Date	17.04.2025
Drawer	K.K.	File	2804580.dwg

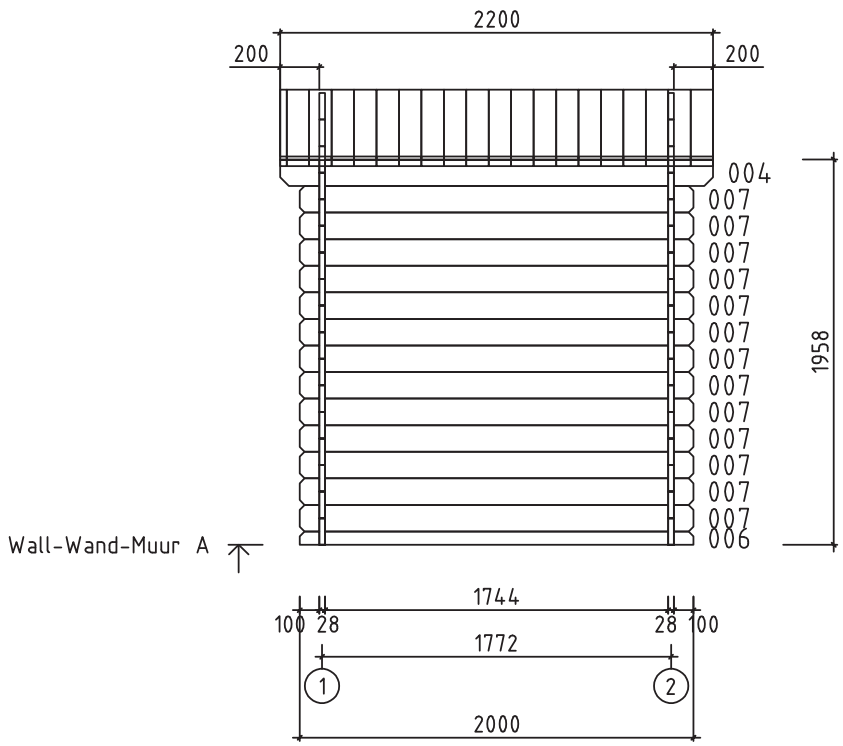

House	2804580	Sheet	3
Drawing	WALL-WAND-MUUR A	Scale	1:35
Material	2.8x13.5	Date	17.04.2025
Drawer	K.K.	File	2804580.dwg

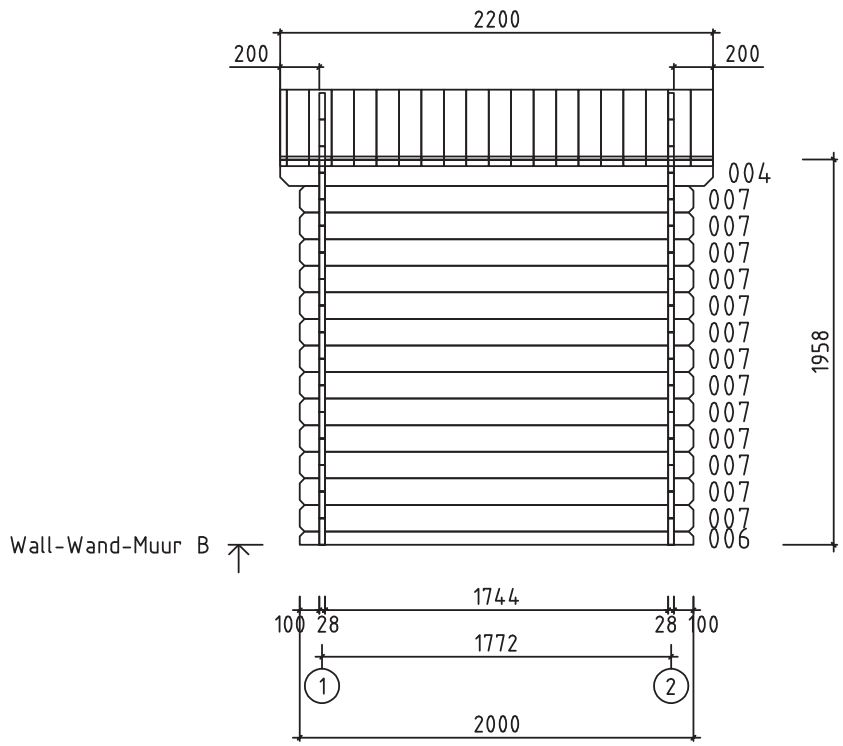

House	2804580	Sheet	4
Drawing	WALL-WAND-MUUR B	Scale	1:35
Material	2.8x13.5	Date	17.04.2025
Drawer	K.K.	File	2804580.dwg

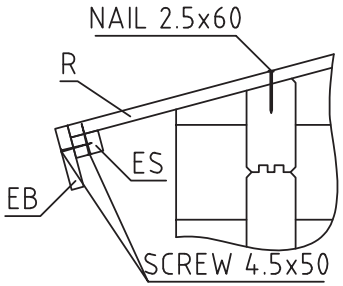

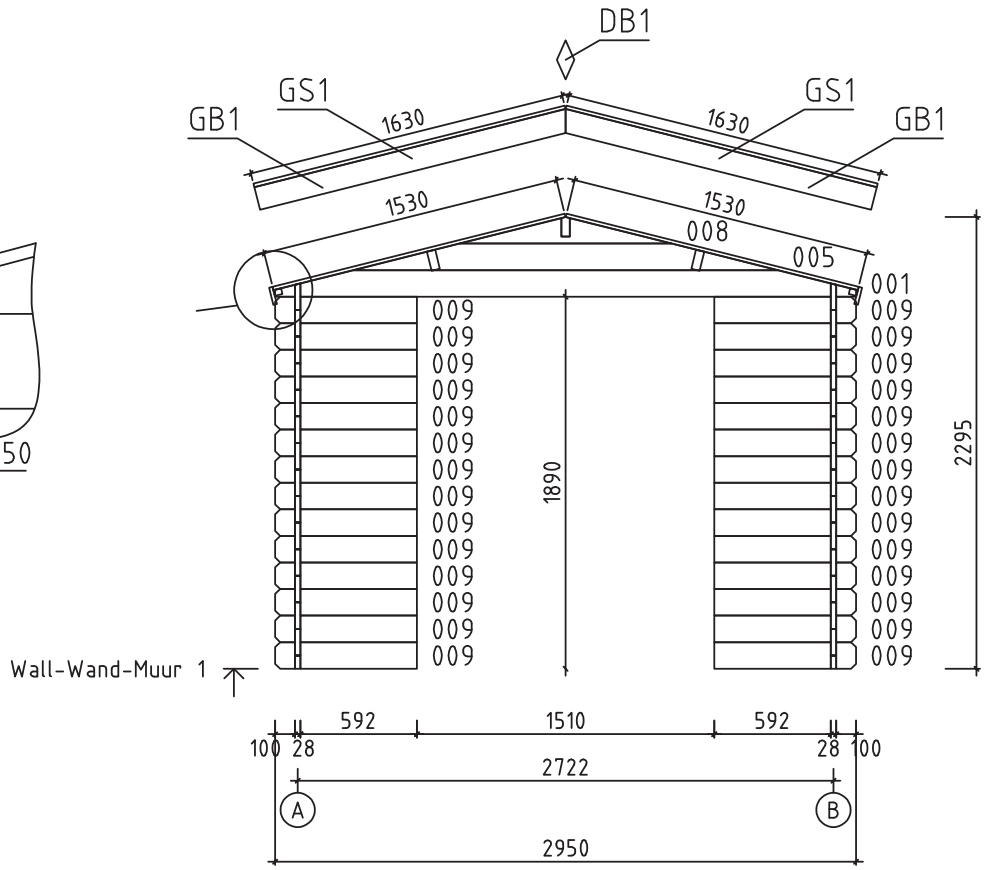

House	2804580	Sheet	5
Drawing	WALL-WAND-MUUR 1	Scale	1:35
Material	2.8x13.5	Date	17.04.2025
Drawer	K.K.	File	2804580.dwg

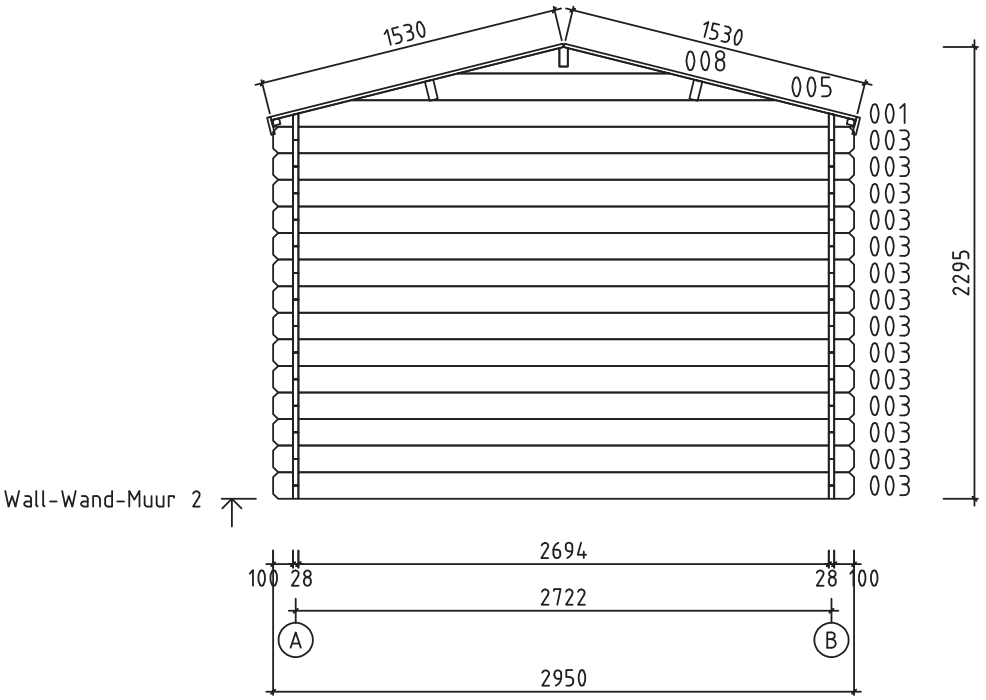

House	2804580	Sheet	6
Drawing	WALL-WAND-MUUR 2	Scale	1:35
Material	2.8x13.5	Date	17.04.2025
Drawer	K.K.	File	2804580.dwg

Pos	Specification-Bestimmung-Omschrijving 2804580	Pcs	Profile (mm)	L (mm)
002	SPARE BEAM-ERZATZBOHLE-MADRIER DE RÉSERVE 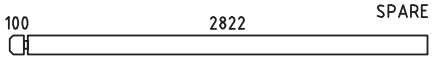	1	28x135	2950
003	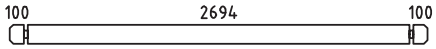	14	28x135	2950
004	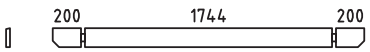	2	28x135	2200
006	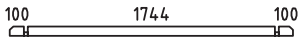	2	28x68	2000
007	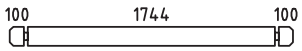	26	28x135	2000
009	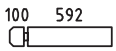	28	28x135	720
W1-1	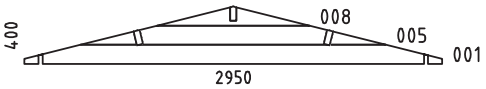	1	28x400	2950
W2-1	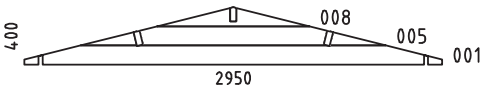	1	28x400	2950
HB	HIT BLOCK-SCHLAGHÖLZER-MADRIERS D´ASSEMBLAGE 	2	28x135	300
RB1	ROOFBEAMS-DACHBALKEN-SOLIVES DE PLAFOND 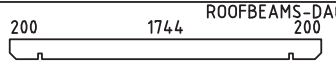	2	43x140	2200
RB2	ROOFBEAMS-DACHBALKEN-SOLIVES DE PLAFOND 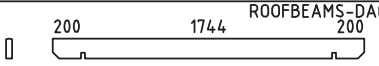	1	43x140	2200
R1	ROOFBOARD-DACHBRETT-VOLIGES  or-oder-ou	52+1 40+1	18x88 18x114	1530
GB1	GABLE BOARD-GIEBELBLENDE-PLANCHE DE RIVE 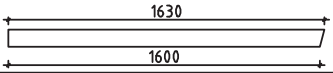	4	18x120	1630
GS1	ROOF FELT FILLET-GIEBELLEISTE-BAGUETTES POUR FIXER LES PLANCHES DE RIVE 	4	18x70	1630
EB1	EAVE BOARD-TRAUFBRETT-LATTES SOUS VOLIGES 	2	18x90	2200
ES1	EAVE SLAT-TRAUFENLEISTE-BAGUETTES POUR FIXER LES LATTES SOUS VOLIGES 	2	30x40	2200
DB1	DIAMOND-RAUTE-ELÉMENTS DE DÉCORATION 	2	18x90	200
SS1	STORM SLAT-STURMLEISTE -BAGUETTE DE TEMPETE	4	18x35	1890
	SCREWS-SCHRAUBEN-VISSER FOR-FÜR-POUR SS1 	12	ø6.0	45
	WASHER-SCHEIBE-RONDELLE FOR-FÜR-POUR SS1 	12	ø6.0	18
	NAIL-NAGEL-CLOUS FOR-FÜR-POUR R1	160	ø2.5	60
	SCREWS-SCHRAUBEN-VIS FOR-FÜR-POUR GB1, GS1, EB1, ES1, DB1	70	ø4.5	50
	SCREWS-SCHRAUBEN-VIS 2x006 FOR-FÜR-POUR	10	ø4.5	90

Kood 2804580	Materjal	File 2804580.dwg	Leht 7

Pos	Specification-Bestimmung-Omschrijving 2804580	Pcs	Profile (mm)	L (mm)
	SCREWS-SCHRAUBEN-VIS FOR-FÜR-POUR RB1, RB2 	6	ø6.0	160
	DOUBLEDOOR-DOPPELTÜR-DOUBLE PORTE (right-rechts-droit) AST P.	1	1500	1850
	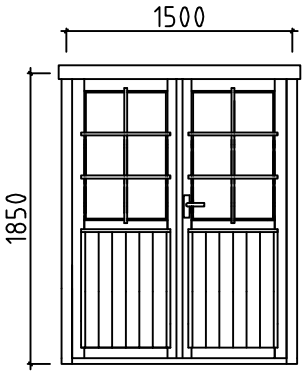			
	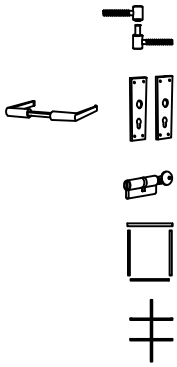	6 1 1 1 2		

Kood 2804580	Materjal	File 2804580.dwg	Leht 8